Design and Development of a Kinetic Power Pack

MAE 4620: Machine Design II
Capstone Team Project

May 1, 2020

Team A
Maria Contreras
Rojeen Kamali
Grant Kim
Alexander Nazon
Rachael Osborne

Approved: _____ Date _____
Prof. Mike Momot, Department of Mechanical and Aerospace Engineering

ACKNOWLEDGEMENTS

The members of the Kinetic Power Pack team would like to thank and acknowledge the following individuals for their support:

- The Link Lab for providing materials and tools, granting us access, and a place to work
- Graduate students Alex Sarris and Luis Lopez for guiding us through research and design
- The Mechanical and Aerospace Engineering Department for Capstone funding
- Machine shop personnel in the mechanical engineering building for shop orientation
- Sebring Smith in Lacy Hall for research and design advice
- Capstone professor and advisor, Professor Momot, for his advice and support

TABLE OF CONTENTS

ACKNOWLEDGEMENTS **2**

LIST OF FIGURES **4**

SECTION 1: INTRODUCTION **4**

1.1 PROBLEM DEFINITION & SIGNIFICANCE 5

1.2 OBJECTIVE & CONSTRAINTS 6

1.3 REPORT ORGANIZATION 7

SECTION 2: LITERATURE REVIEW **8**

SECTION 3: DESIGN AND ANALYSIS **10**

3.1 PARTS OF THE MODEL 10

3.2 ENGINEERING STANDARDS 12

3.3 DESIGN AND CALCULATIONS 14

3.4 COST ANALYSIS 16

SECTION 4: MANUFACTURING **19**

4.1 DESIGN FOR AUTOMATION 19

4.2 DESIGN FOR MANUFACTURE 20

4.3 DESIGN FOR SAFETY 21

4.4 DESIGN FOR THE ENVIRONMENT 21

SECTION 5: PRODUCT TESTING **22**

SECTION 6: RESULTS & CONCLUSION **24**

REFERENCES **26**

APPENDIX A: Drawings of Components **28**

APPENDIX B: Snap Fit Calculations **35**

APPENDIX C: Bill of Materials and Cost Analysis **37**

LIST OF FIGURES

Figure 1: Final CAD design of the Kinetic Power Pack 6

Figure 2: nPower Personal Energy Generator 9

Figure 3: EcoCentric Now's Shake Flashlight 10

Figure 4: Pololu S7V7F5 Voltage Regulator 11

Figure 5: (a) Power Generation System, Circuitry, and Casing; (b) Final Physical Prototype Casing 11

Figure 6:Power Generation System 14

Figure 7: (a) Circuitry and Battery Pack; (b) Lower Half of Casing with USB Port 15

Figure 8: Budget Breakdown of Kinetic Power Pack 17

Figure 9: Specific Casing Design Considerations 19

Figure A-1: Top Portion of Casing 28

Figure A-2: Middle Portion of Casing 29

Figure A-3: Bottom Portion of Casing 30

Figure A-4: Switch 31

Figure A-5: Circuitry 32

Figure A-6: Shakelight tube 33

Figure A-7: Battery Blackbox 34

SECTION 1: INTRODUCTION

1.1 PROBLEM DEFINITION & SIGNIFICANCE

Hikers and others in the outdoor community may go days without electricity. Thru-hiking the Appalachian Trail, for example, takes about five months and covers 2,189.2 miles (The Appalachian Trail Conservancy, n.d.). During their several months of planning, hikers must account for charging their headlamps, flashlights, cell phones, and other electronics while on the trail as huts or small towns may be days apart. A cell phone is a multifunctional tool; it is a communication device, GPS, compass, and so much more. Although many hikers choose to disconnect from technology to enjoy their experience, many rely on their devices while on the trails. Therefore, the report focuses on creating a kinetic phone charger, a device which charges cell phones through human movement. This will be particularly useful for backpackers when they are on the trail and far from electricity.

In addition to helping hikers and backpackers, this device may also be useful for runners, bikers, and walkers who want to keep their phone charged while they exercise. Unlike traditional phone chargers which require an outlet, the kinetic power pack has no restrictions on where you can charge your phone. Human motion also serves as a clean, renewable energy source. Ellabban et al. (2014), estimates that renewable energy sources have the potential to "provide over 3000 times the current global energy needs". However, this great energy potential can be unlocked only by modern innovations such as the kinetic power pack. This kinetic phone charger will serve as a stepping stone towards a cleaner energy future.

1.2 OBJECTIVE & CONSTRAINTS

The goal of this project was to develop a phone charger that can be strapped onto an arm, a leg, or any other object with periodic motion, like a water bottle hanging from a backpack. The phone charger is powered through induction; as the user walks or runs, the swinging motion of their limb forces a magnet to move in and out of a coil which in turn produces electricity.

Although similar kinetic chargers exist, they are large and too expensive for the average user. This project aimed to create a device that is more affordable and compact in addition to being durable, comfortable for the user to wear, easy to use, and efficient at charging a mobile device. At a minimum, the product must remain functional after a 3-foot drop from a tabletop, be aesthetically pleasing, and perform for a minimum of 20 minutes of continuous usage. The project team had a budget of $400 to design, prototype, and finalize the product over the course of the year.

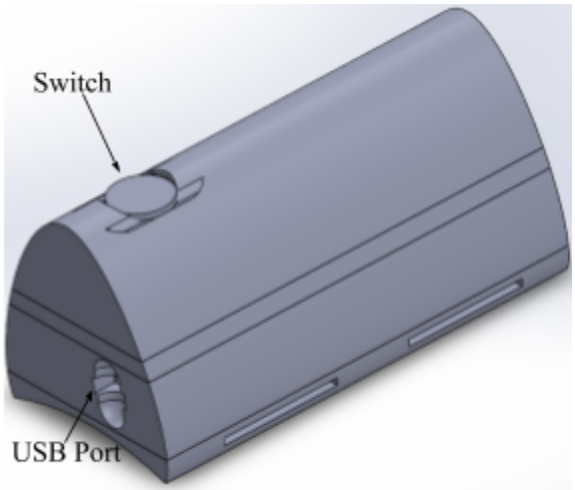

Figure 1: Final CAD design of the Kinetic Power Pack

Our device, the Kinetic Power Pack which is shown in Fig. 1, has some functional limitations. The power output is not large enough to charge larger devices such as computers, large lamps, or other household items. In addition, the product is not waterproof so great care must be taken when hiking or running near bodies of water.

1.3 REPORT ORGANIZATION

This report will cover pre-existing devices and previous research related to the Kinetic Power Pack, an analysis of the final design and calculations, test results, a cost analysis, manufacturing requirements, and a discussion of the final design and areas for improvement.

SECTION 2: LITERATURE REVIEW

Many similar charging products are currently on the market targeted toward outdoor enthusiasts. A popular design is a flashlight that is shaken to move the magnet through a coil therefore generating power (Martindell, n.d.). These designs incorporate Faraday's Law where the moving magnet in the coil of wire will induce a voltage in the system (Lucas, 2016). Patent US5818132A illustrates "a linear motion electric power generator for generating electric current from work done by an intermittent force" by moving a magnet in a linear motion though coils (Abstract section, 1997). The design of the technical project incorporated this magnet-coil system but in a different application. The product specifically uses human movement through arm and leg oscillations while walking and hiking to recharge cell phones when no other form of electricity is available.

A student group from California Polytechnic State University conducted a similar senior project to generate electricity using Faraday's Law of Induction with the rotational movement of a tire. They used kinetic energy generated by the user or engine and converted it into electricity to power devices such as LEDs or rechargeable batteries (Gasper, A. & Omsberg, B., 2016). Their project is similar, in that the magnet-coil system will be charging a battery that then will charge a cell phone. However, these designs do not solve the specific problem of being able to charge a device while on the trails, away from electricity.

Figure 2: nPower Personal Energy Generator

The nPower Personal Energy Generator (PEG) by Tremont Electric (as shown above) is another product that draws its power from kinetic energy. This device targets the outdoor community as well but different from the CPSLO senior project, it can charge while walking or cycling. However, weight, size, and cost are major factors for hikers aiming to pack lightly and efficiently. The nPower PEG is listed at $200 and is about 10.5 inches in length which is much larger and more expensive than the Kinetic Power Pack (Laskey, 2012).

SECTION 3: DESIGN AND ANALYSIS

3.1 PARTS OF THE MODEL

The final design includes 4 main parts: the power generation system, the circuitry, the exterior casing, and exterior additions to improve comfort. The power generation system was taken from EcoCentricNow's SL40-B flashlight, which can be seen in Fig. 3. This flashlight contains a rare earth metal magnet (the specific type of magnet is unknown) which passes through copper coiling. As the magnet moves through the coil, the changing magnetic flux induces a current in the wire. The copper wire connects to a circuit board, which allows the power generated to pass through a bridge rectifier into the 3.6 V, 40 mAh nickel metal hydride (NiMH) battery.

Figure 3: EcoCentric Now's Shake Flashlight (EcoCentricNow LLC, n.d.)

The circuitry connects the power generation system to the Li-Ion battery pack, which requires an input voltage of 5V in order to charge. A Pololu S7V7F5 voltage regulator, shown in Fig. 4, was used to step the 3.6 V output from the battery up to 5 V.

Figure 4: Pololu S7V7F5 Voltage Regulator (Pololu, n.d.)

This regulator was connected to the SparkFun USB MicroB Plug, which was then plugged into the Li-Ion battery pack. The Li-Ion battery pack and accompanying circuitry was taken from a TYLT 5200 mAh portable power bank. The power generation system, circuitry, and exterior casing can be seen in Fig. 5.

(a) (b)

Figure 5: (a) Power Generation System, Circuitry, and Casing; (b) Final Physical Prototype Casing

The power generation system and circuitry are enclosed in an exterior casing. This casing was 3D-printed for lightness and ease of production; however, in the future it could be injection molded to reduce costs. The design of the casing, which will be discussed in more detail later, is compact while still being comfortable for the user. It has a curved back to help it conform to the surface to which it is attached. To improve comfort, NinjaFlex and holes for straps were added to the final CAD design. If we had the opportunity to complete the physical prototype, a section of NinjaFlex would have been glued onto the back of the casing. NinjaFlex is an extremely flexible filament, exhibiting 65% elongation at yield (NinjaTek, 2016), which conforms to the user's arm or leg as they move. Finally, velcro straps would have been looped through the 3D printed casing to improve versatility. These straps allow the user to easily attach the device to an arm, leg, or water bottle. Dimensions for all parts of the final CAD design can be seen in Appendix A.

3.2 ENGINEERING STANDARDS

In order to sell the Kinetic Power Pack to the general public, the device must meet multiple national and international standards set by organizations such as the International Electrotechnical Commission (IEC), Underwriter Laboratories (UL), the United States Department of Energy (DOE), the United Nations (UN), the Federal Communications Commision (FCC), and the California Energy Commission (CEC). Under CFR 429, federal regulations require a certification report to be submitted to the DOE. This report must contain the voltage, charge capacity, and energy capacity of the battery in addition to the unit energy consumption and discharge energy of the device ("10 CFR", 2016). The Li-ion battery would need to be tested to meet the UN 3480 code (Byczek, 2018), the IEC 62133 code

("Understanding", n.d.), the UL 1642 standard, and the UL 2054 Standard (Cheng, 2019). In addition, "most USB-enable devices such as power banks contain an unintentional radiator that creates radiofrequency energy within itself...Unintentional radiators are regulated under FCC Part 15," (Cheng, 2019) and the IEC's Electromagnetic Compatibility standards ("Electromagnetic", n.d.).

In order to sell the Kinetic Power Pack in California, the device "must be tested for energy efficiency at a California Energy Commission (CEC) approved laboratory" (Benson & Reczek, 2017, p. 33). The power bank and casing must be made in accordance with California Proposition 65 (CA Prop 65) which regulates the presence of harmful substances (Cheng, 2019). The PLA and Ninjaflex would need to be checked for compliance with this standard. Other relevant standards include the UL 2734- Standard for Portable Power Packs and the UL 2056- Outline of Investigation for Safety of Power Banks which regulate battery specifications "as well as input/output, enclosure, operating temperature and abnormal usage and fault tolerance testing" Byczek, 2018).

The final CAD drawings of the Kinetic Power Pack incorporated two standards from the American National Standards Institute (ANSI) and the American Society of Mechanical Engineers (ASME). The hole and shaft on the casing were dimensioned with tolerances according to the ANSI B4.2 standard. The G7/h6 shaft basis was used; specific numbers can be seen in Fig. A-1 through Fig. A-3. Overall, Geometric Dimensioning and Tolerancing (GD&T) was completed according to the ASME Y14.5 formatting standards. Although some standards for additive manufacturing exist, most standards for 3D printing (materials, processes, and

treatments) are still being developed (AMFG, 2018) so the casing was not printed with any specific standards in mind.

3.3 DESIGN AND CALCULATIONS

The lens and upper portion of the flashlight were not needed for the power system. These parts of the light were cut off, leaving only the magnet coil system, the circuitry, and the plastic casing, which helps to guide the magnet through the coil. The LED on the circuitry was not removed because it provides a visual indicator when the battery is charging properly. In the final design, the original plastic stoppers from the flashlight were kept to damp the magnet's motion as it reached each end of the tube. This portion of the design can be seen in Fig. 6.

Figure 6: Power Generation System

The magnet contained in the power generation system is dangerously strong. To minimize the risk of the strong magnetic field interfering with the circuitry, the power generation was separated from the rest of the circuitry within the 3D printed casing. As shown in Fig. 5 and Fig. 6, the magnet coil system fits into the upper half of the exterior casing, below which is a thin rectangular plate of plastic to separate the upper half from the lower half. The thin rectangular

plate can be seen in Fig. 1 and in purple in Fig. 4. The original off/on switch from the flashlight was kept; however, the switch had to be extended upwards through the thickness of the casing so that the user could access it. The switch can also be seen in the final CAD design in Fig. 1.

The lower half of the casing, shown in Fig. 7, contains the remaining circuitry and battery pack. In order to keep the components separate, walls were printed between parts. Small openings were made between the walls to allow wires that connected components to pass through. The final CAD design also contains an opening to allow the user to access the USB port. This opening has sloped sides so the user can easily put their fingers into the slot to unplug their charger.

(a)

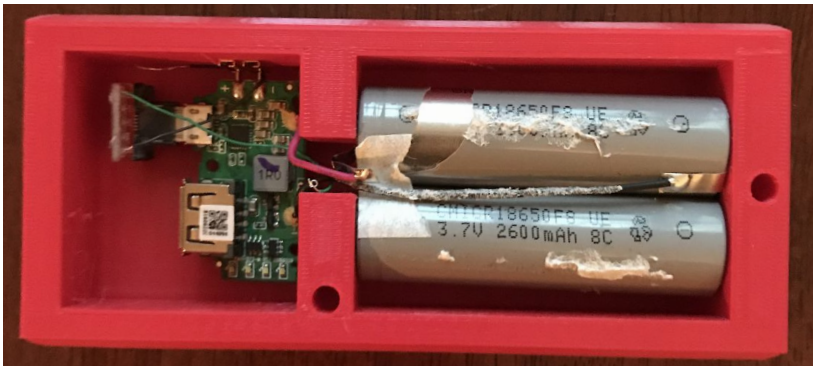

(b)

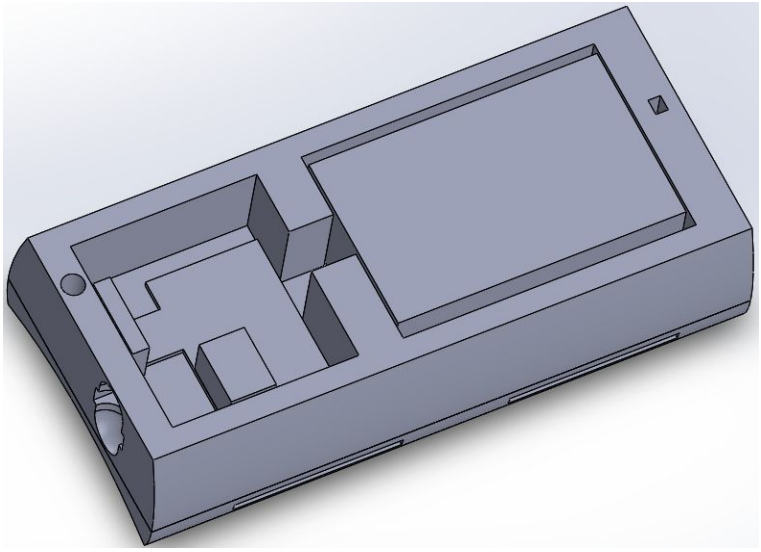

Figure 7: (a) Circuitry and Battery Pack (b) Lower Half of Casing with USB Port

The casing was designed to ensure internal components were as close as possible while maintaining a comfortable shape and durability. The case was 3D printed for ease of prototyping and to keep the case as minimalist and low weight as possible. It was decided to split the casing into multiple parts to compartmentalize each section and to simplify production and design.

The snap fit on the casing was designed with a length of 0.4 in, a width and depth of 0.1 in, and a head height of 0.125 in. This design yielded a deflection of 0.0245 in and was compact enough to fit easily into the overall casing. Full calculations for the snap fit can be seen in Appendix B.

The sliding fit on the other side of the snap fit was designed with a 0.71 inch long pin with a diameter of 0.17 inches. This is paired with a hole on the bottom part with a 0.2 inch diameter. This allows for a second point of rotation for the top part of the casing, which reduces the amount of torque experienced by the snap fit, thus ensuring that the part can be used for longer. The fit helps to align the top case to the bottom case and hold the middle section in place. Furthermore, there is no change in force required to open or close the casing.

3.4 COST ANALYSIS

Fig. 8 is a budget breakdown dividing what money was spent on into three categories. As seen in Fig. 8, most of the money was spent on the research and development aspect of the project because we went through multiple iterations of designs and circuitry. Appendix C consists of two tables entailing the bill of materials and cost analysis. Table C-2 is the bill of materials for manufacturing the final Kinetic Power Pack. Additionally, Table C-2 shows it would cost $100.07 to manufacture the final product. Table C-1 is the bill of materials for the entirety of the

project. It shows that the three largest contributors to the manufacturing cost were the shake flashlight, the lithium ion battery, and the 3D print of the casing.

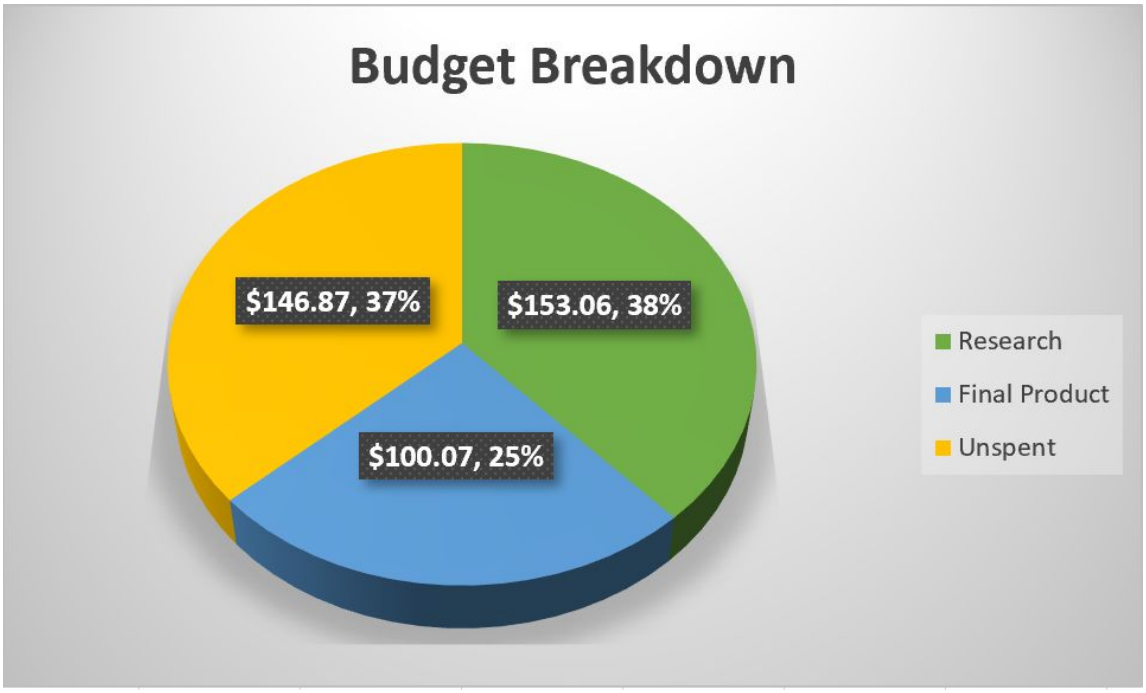

Figure 8: Budget Breakdown of Kinetic Power Pack

Some costs could have been reduced. For example, the shake flashlight was $29.95 through Amazon and a 3rd party retailer; however, on the official website it is $15.95. In a large scale manufacturing setting purchasing items in bulk would allow for increased savings. For the Li-Ion battery, a team member had a preowned third party power bank that was taken apart. The price the owner paid was $20 however, on Amazon the same one was found for 50% off at $9.99 that could be purchased in the future. For the final prototype a personal printer was used; however the cost of 3D printing the outer casing on the university's higher quality printers would have been $2.50 per cubic inch. Again in large scale manufacturing, injection molding could be used to further reduce the casing cost. Additionally, properly planning out the shipping could have helped reduce the cost of some items. It was necessary for the team to pay for expedited shipping

on a few items, which raised the R&D costs. In comparison to the nPower PEG, because our cost to manufacture was $100.07 it is possible to undercut their $200 retail price making our product competitive in the market. Moreover, as mentioned above the $100.07 price could be reduced significantly in a larger scale manufacturing process. From Table C-1 it can be seen that $253.13 was spent in total leaving the project balance $146.87 under the $400 budget for the year.

SECTION 4: MANUFACTURING

4.1 DESIGN FOR AUTOMATION

There are multiple design considerations in the prototype to facilitate the product assembly process. In terms of orientation, the bottom section of the device casing has a USB port on one side that will help differentiate the left side from the right side of the device as seen in Fig. 9.

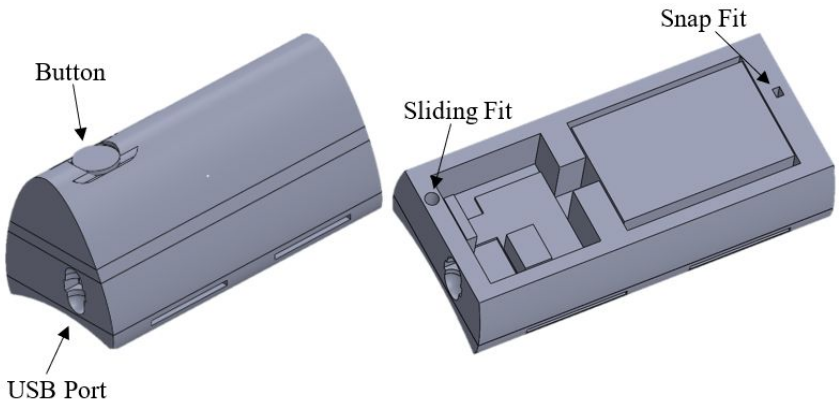

Figure 9: Specific Casing Design Considerations on the Exterior (Left) and Interior (Right)

The vertically asymmetrical geometry and presence of a switch on the top section will help differentiate the top and bottom sides. In addition, Fig. 9 also shows that the three parts of the casing can be fit together without confusion because there is a snap fit on one side and a sliding fit on the other side. The 3D printed casing has dimensioned compartments for the internal components such as the circuitry, battery, and magnet-coil system. Since an existing product was taken apart to create the prototype, further analysis is required to determine whether the circuitry will become tangled while manufacturing but a circuit board will help mitigate the risk. Furthermore, the snap fit and sliding fit will be used to close the top part of the case.

Additionally, the circuits will be outsourced reducing the amount of parts that would need to be assembled.

4.2 DESIGN FOR MANUFACTURE

The parts of the device have been chosen for their minimum material and unique qualities. The material will be minimized by reducing the infill density of each part. The material of the 3D printed casing, PLA (Polylactic Acid), was chosen because of its affordability and accessibility. A coating of NinjaFlex will be used on the back of the device that touches the user for comfort. The magnet-coil will use copper wiring because of its highly conductive properties. By using the preexisting shake flashlight, the parts in the design have been kept to a minimum: 3D printed exterior casing, Li-ion battery, circuitry (voltage regulator and USB MicroB chip), NinjaFlex coating, straps, and the shake flashlight which consists of the magnet coil system, internal circuitry, rubber stoppers, and the NiMh battery.

Additionally, the amount of sharp corners were reduced as much as possible to minimize stress concentrations and future crack propagations. The design was also created to be uniform and balanced to reduce any possible residual stress and warping during the manufacturing process. The product's design complexity was also minimized which makes design changes easier to implement. Yet, multiple tests need to be done to confidently say the device is ready for manufacturing.

4.3 DESIGN FOR SAFETY

The product has not caused any safety issues during its creation but the team is aware that there may be risks involved. The battery could heat up and be uncomfortable if the device is strapped too tightly. Safety hazards during manufacturing include: electrical hazards, misusing the strong glue that adheres the NinjaFlex to the PLA, and improper handling of the strong magnet. The inner and outer casts could be damaged causing the device to open. Due to this, children should be advised to stay away from the device because of the small damping materials inside. Also, the magnet in the power generation system within the device is dangerously strong and should be handled carefully. Furthermore, extended wear of the straps and velcro could cause heat rashes, contact dermatitis and wear out over time but further testing must be conducted to know the exact risks of the device.

4.4 DESIGN FOR THE ENVIRONMENT

The casing of the device is created with PLA which is a thermoplastic derived from renewable resources such as corn starch and sugar cane; therefore, it is recyclable. However, the NinjaFlex, batteries, and magnets are not easily recyclable. The NinjaFlex will be glued to the exterior case and will be difficult to separate. Additionally, the velcro strap is made out of mostly nylon and polyester which need to be recycled at specific facilities; therefore, it is recommended to just find another way to reuse them. Though the impact on the environment was taken into consideration while designing and creating the device, more product testing will lead to a more environmentally friendly device. Possible changes include using sustainably sourced fabrics and finding alternate ways of attaching the NinjaFlex to the casing.

SECTION 5: PRODUCT TESTING

The only test successfully completed was the drop test. The device was dropped from a 3 ft height to determine if it could withstand being pushed off a desk. The current prototype withstood the drop and stayed intact. A further design change due to the drop test was to add an interior padding to ensure no damage to the parts within the 3D printed casing. Further drop testing could ensure that the device stays intact through the manufacturing process then from transport to user. By understanding how and where it breaks, the product will have sufficient design reinforcements and customer warning labels.

Before doing full assembly tests, the individual component's integrity and limits would be examined. One test the team would perform is the Rockwell hardness test on the outer, magnet, and electrical casings. Since hardness is correlated to strength, wear resistance and other material properties it would give insight on the material limits of these casings. Then the team would do an impact test to understand with how much force, where and how each component breaks. Afterwards, design and material changes would be done to strengthen the components.

Once all the parts have been printed and assembled, visual inspection would be the first test done by the team and others. Preferably, others who have never seen the device would perform this test. They would be asked to interact with the device and allow the team to observe. That way the team could write down their comments, especially those that deal with aesthetics, comfort and ease of usage. This test would be similar to the aesthetics/ergonomics test that was done in class which gave the team insight on how important color and size was to potential customers.

Additionally, the team's visual inspection would include checking for any irregularities, voids, cracks, warped sections, and internal pores with an electron microscope, if possible. After visual inspection, the team would do a dimensional analysis to ensure that the original design dimensions were met; some could be changed by the irregularities specified above. Afterwards, the team would do multiple electrical tests to ensure the electrical components perform the way they were designed to.

Then, a portion of the samples would endure thermal shock tests to understand the device's thermal limits. Thermal shock tests expose the device to different extremely hot and cold cycles. Therefore this could help the team understand if any material changes are necessary, proper storage and transport temperature settings, and its performance in different geographical locations due to weather. With the other portion of the samples, vibrational shock testing could be performed to understand the device's life cycle; since the charging depends on the magnet's movement. The device's lifespan can be further explored by how many vibration cycles the device can withstand without case breakage or electrical component damage.

With all these tests performed the team would have a better understanding of how and where the device breaks, what its temperature limits are, what the lifespan at x amount of speeds and usages is, its common irregularities, etc. The test results would empower the team to better market the device and inform the customers. The more we understand our device's performance, the safer and more satisfied our customers would be.

SECTION 6: RESULTS & CONCLUSION

Overall, a working physical prototype was developed. However, the design still has a lot of room for aesthetic, ergonomic, and structural optimizations. The middle section faced significant warping during the prototyping phase. This was most likely due to high print speeds which increases the variance in temperature between layers. The common solution to this is reducing speeds, which increases the production time, and using a heated bed, which reduces the temperature variance between layers. With more time and access to a better printer, warping would not have been an issue.

To complete our final CAD design, a switch and USB port were added to the casing. As the switch was designed, it would have been easy to insert and slide up and down. A future version would have a way to lock it in place. Also in the future, the orifice for the USB port could be improved and made neater. Ideally, the opening would be flush to the plane of the USB port; however the orientation of the port with respect to the rest of the circuitry made this difficult. More options would need to be explored to fix this, such as USB extensions or exterior casing design changes.

In addition, an opening compromises the casing's water resistance. Due to the target audience, users may hike, bike, or run through wet areas. As a result, water resistance is an important feature to be added in future iterations. Potential solutions include a covering for the port when the product is not in use, adding a water resistant coating to the outside of the 3D printed casing, or selling the device with a waterproof case in which the 3D printed casing would be enclosed.

In general, the Kinetic Power Pack requires further testing. The team did not get the chance to test different options for sound and motion damping. As a result, we defaulted to using the stoppers originally contained in the flashlight power system. In the future, we would like to test the device with furniture padding, plastic springs, or potentially even a system of springs that could be adjusted depending on whether the user is walking or running to decrease noise and optimize the oscillation frequency. The device also needs to be tested on a user who is running or walking for a prolonged period of time. Alternatively, the team could create a mechanism to emulate human motion and use this to test the Kinetic Power Pack. This will help us to determine the lifespan of the circuitry and casing and will provide us with user feedback on the ergonomics of the design. Lastly, the device needs to be tested for its efficiency when attached to an arm versus a leg or water bottle. Although the final physical prototype still needed more work, the changes and testing required to make the promising Kinetic Power Pack more marketable are straightforward and feasible.

REFERENCES

10 CFR § 429.39—Battery chargers. (2016). Legal Information Institute. Retrieved from https://www.law.cornell.edu/cfr/text/10/429.39

AMFG. (2018, October 19). Developing standards for 3D printing: where are we today? Retrieved from https://amfg.ai/2018/10/19/developing-3d-printing-standards-where-are-we-today/

Benson L. M., Reczek, K. (2017). A guide to United States electrical and electronic equipment compliance requirements. *National Institute of Standards and Technology.* doi:10.6028/NIST.IR.8118r1

Byczek, R. (2018, February 14). Challenges for manufacturers and retailers in certifications and regulations for power banks. Battery Power Online. https://www.batterypoweronline.com/articles/challenges-for-manufacturers-and-retailers-in-certifications-and-regulations-for-power-banks/

Cheng, V. (2019, December 13). Power banks safety standards in the United States. *Compliance Gate*. https://www.compliancegate.com/power-banks-regulations-united-states/

EcoCentricNow LLC. (n.d.) Shake LED Flashlight SL40-B, Rechargeable NiMH Battery, 2hrs Light per Charge, 1yr. Warranty, STEM Education, Camping, Safety Kit. Retrieved from https://ecocentricnow.com/product/shake-led-flashlight-sl40-b-stem-education-camping-safety-kit/

Electromagnetic Compatibility. (n.d.). ANSI Webstore. Retrieved April 29, 2020, from https://webstore.ansi.org/industry/household-appliances/electromagnetic-compatibility

Ellabban, O., Abu-Rub, H., Blaabjerg, F. (2014, November). Renewable energy resources: Current status, future prospects and their enabling technology. *Renewable and Sustainable Energy Reviews*, 39, 748-764 Science Direct

Filamentum. (2018). PLA Extrafill. Retrieved from https://shop.3dfilaprint.com/ekmps/shops/billyboyclyde/resources/Other/2018-datasheet-pla-extrafill.pdf

Gasper, A. & Omsberg, B. (2016). Faraday rechargeable battery system. *California Polytechnic State University Electrical Engineering Department.*

Konotchick, J. A. (1998). United States Patent No. US5818132A. Retrieved from https://patents.google.com/patent/US5818132A/en

Lasky, M. S. (2012, October 9). Review: tremont electric nPower PEG. Wired. Retrieved from https://www.wired.com/2012/10/npower-peg/

Lucas, J. (2016, January 28). What is Faraday's law of induction? Retrieved September 26, 2019, from LiveScience website: https://www.livescience.com/53509-faradays-law-induction.html

Martindell, C. (n.d.). *The Best Portable Power Sources for Backpacking*. Backpacker. Retrieved September 26, 2019, from https://www.backpacker.com/gear/the-best-portable-power-sources-for-backpacking

NinjaTek. (2016). NinjaFlex 3D Printing Filament. Retrieved from https://ninjatek.com/wp-content/uploads/2019/10/NinjaFlex-TDS.pdf

Pololu. (n.d.) Pololu 5V Step-Up/Step-Down Voltage Regulator S7V7F5. Retrieved from https://www.pololu.com/product/2119

SparkFun. (n.d.). SparkFun USB MicroB Plug Breakout. Retrieved from https://www.sparkfun.com/products/10031

The Appalachian Trail Conservancy (n.d.). Shelter life. Retrieved from https://appalachiantrail.org/home/explore-the-trail/thru-hiking/shelters

Understanding IEC 62133 standard. (n.d.). Intertek. Retrieved April 29, 2020, from https://www.intertek.com/energy-storage/battery-safety/iec-62133/

APPENDIX A: Drawings of Components

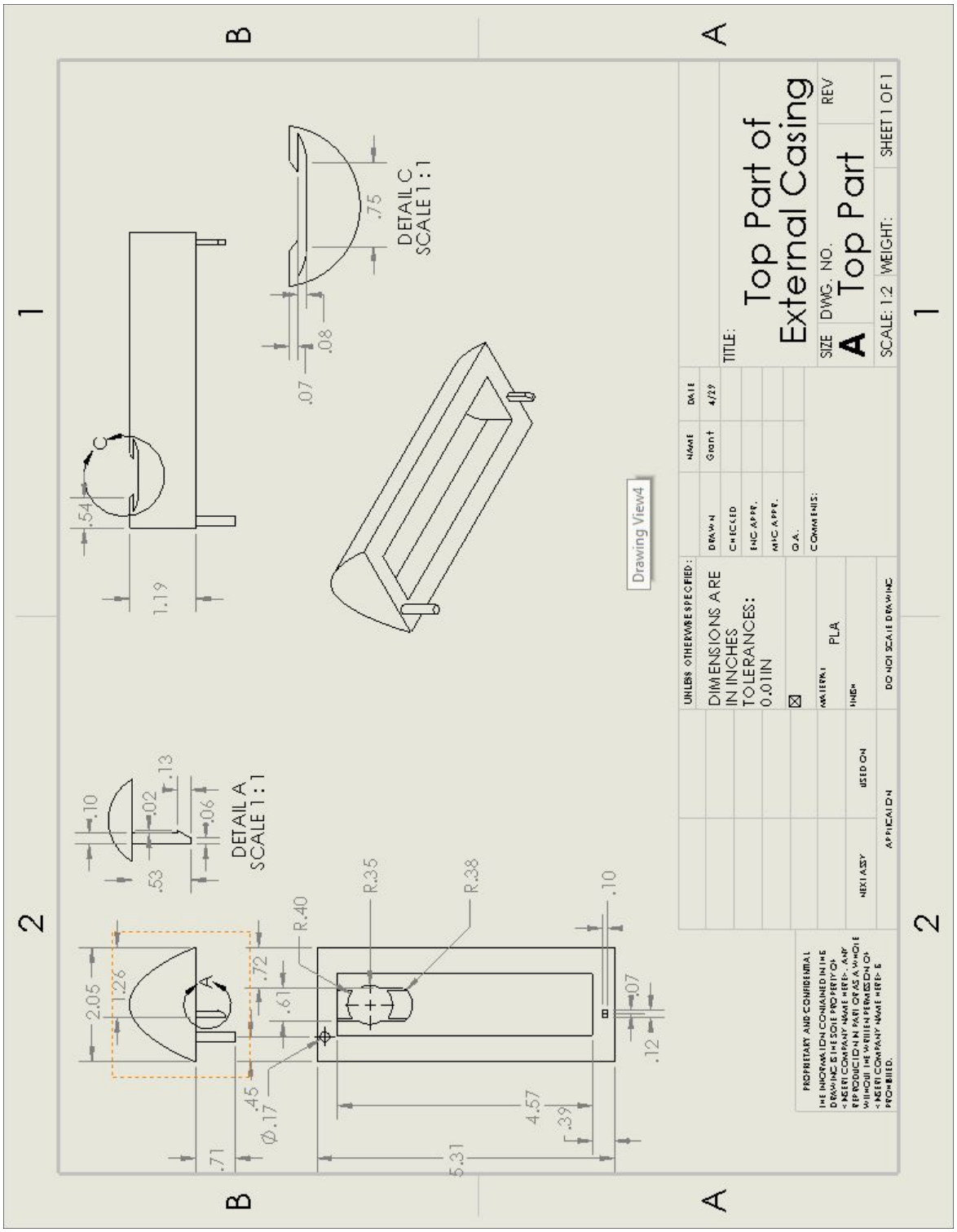

Figure A-1: Top Portion of Casing

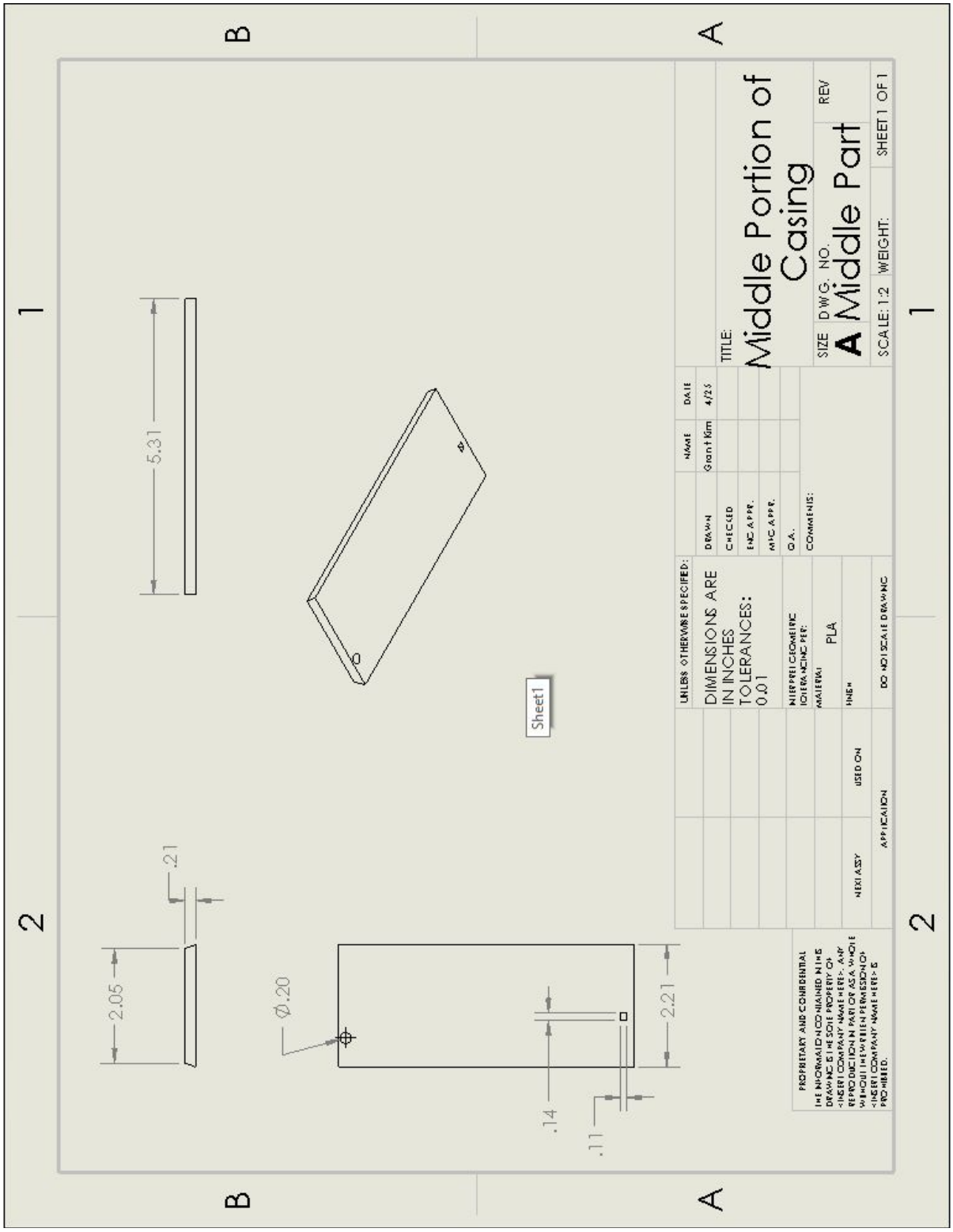

Figure A-2: Middle Portion of Casing

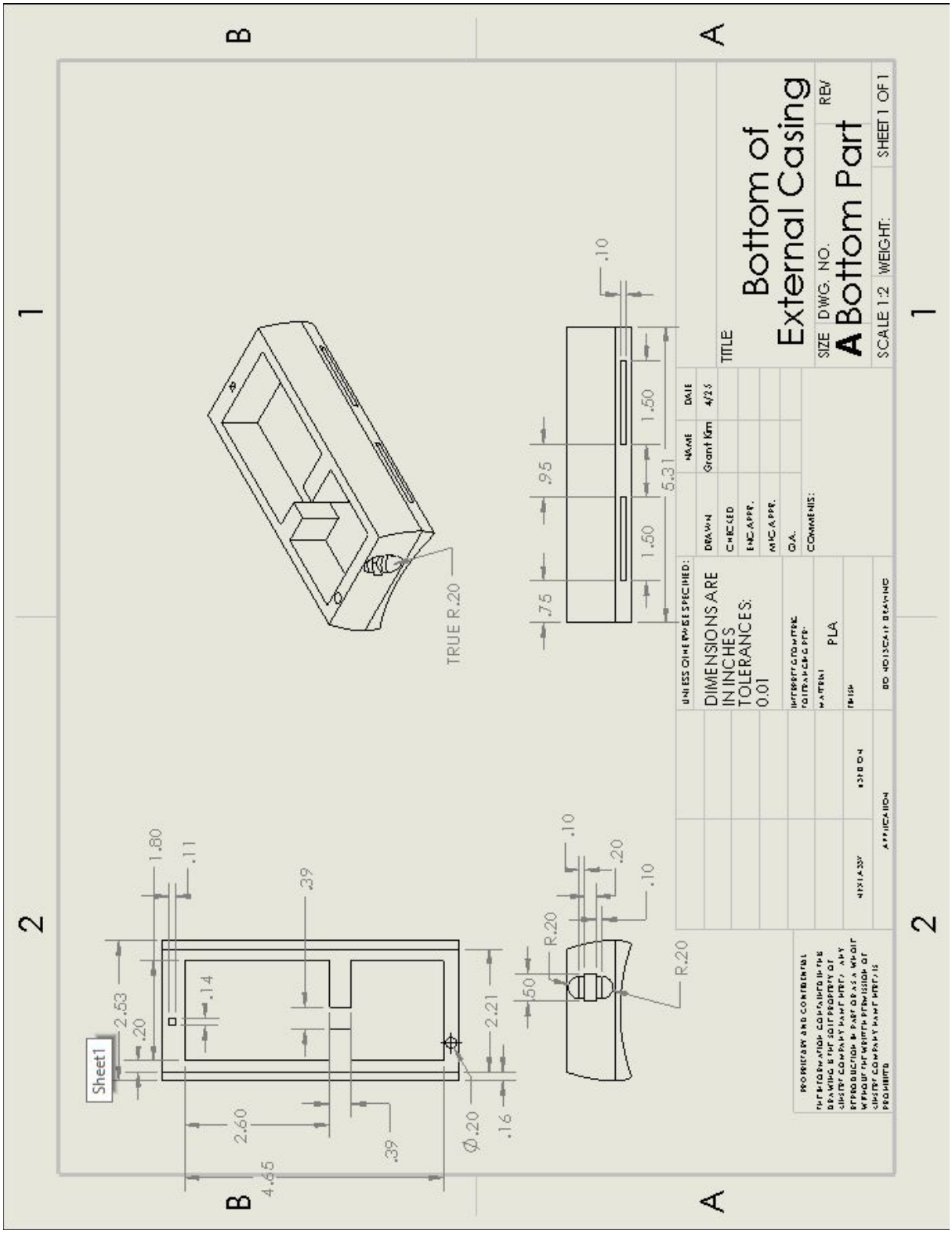

Figure A-3: Bottom Portion of Casing

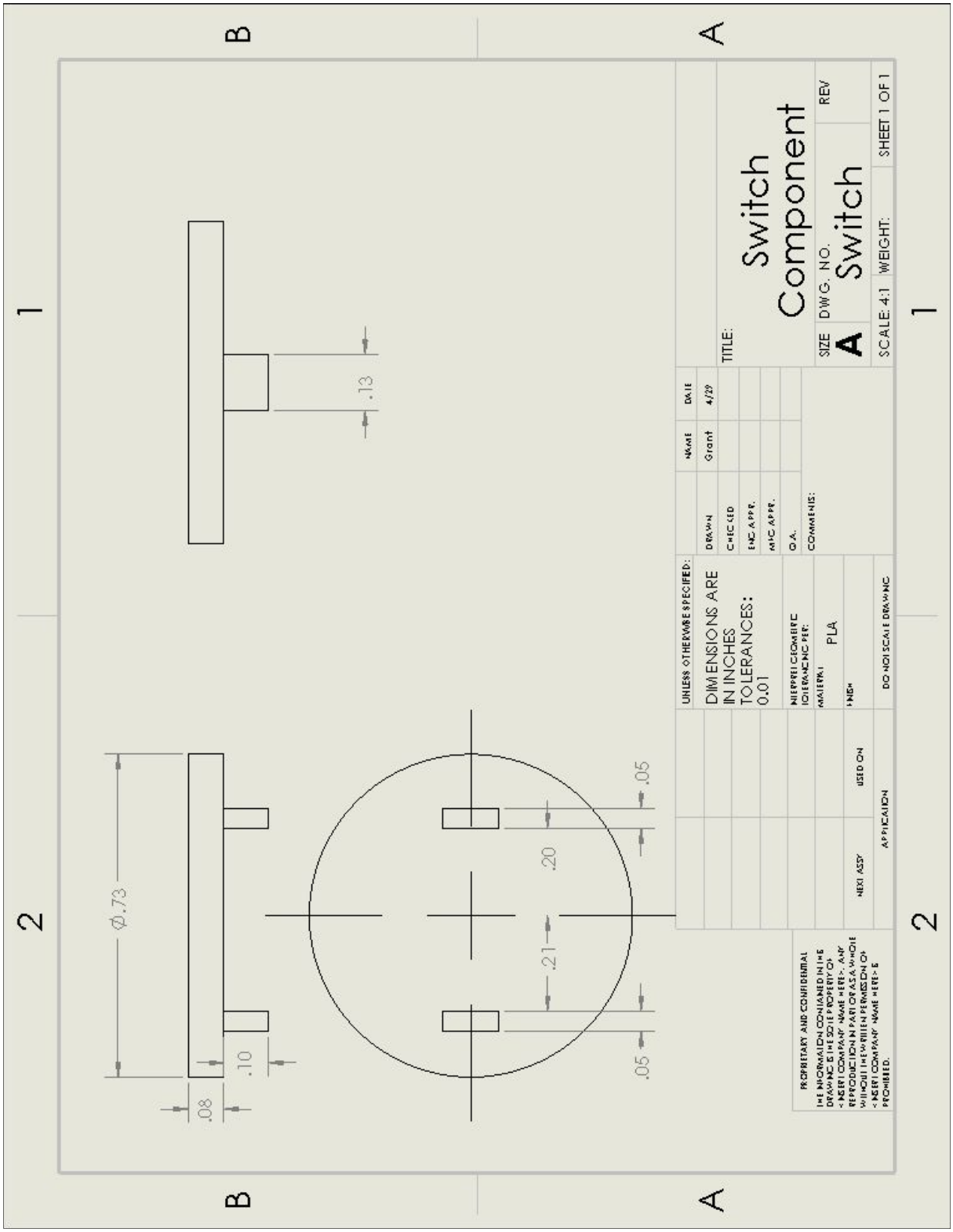

Figure A-4: Switch

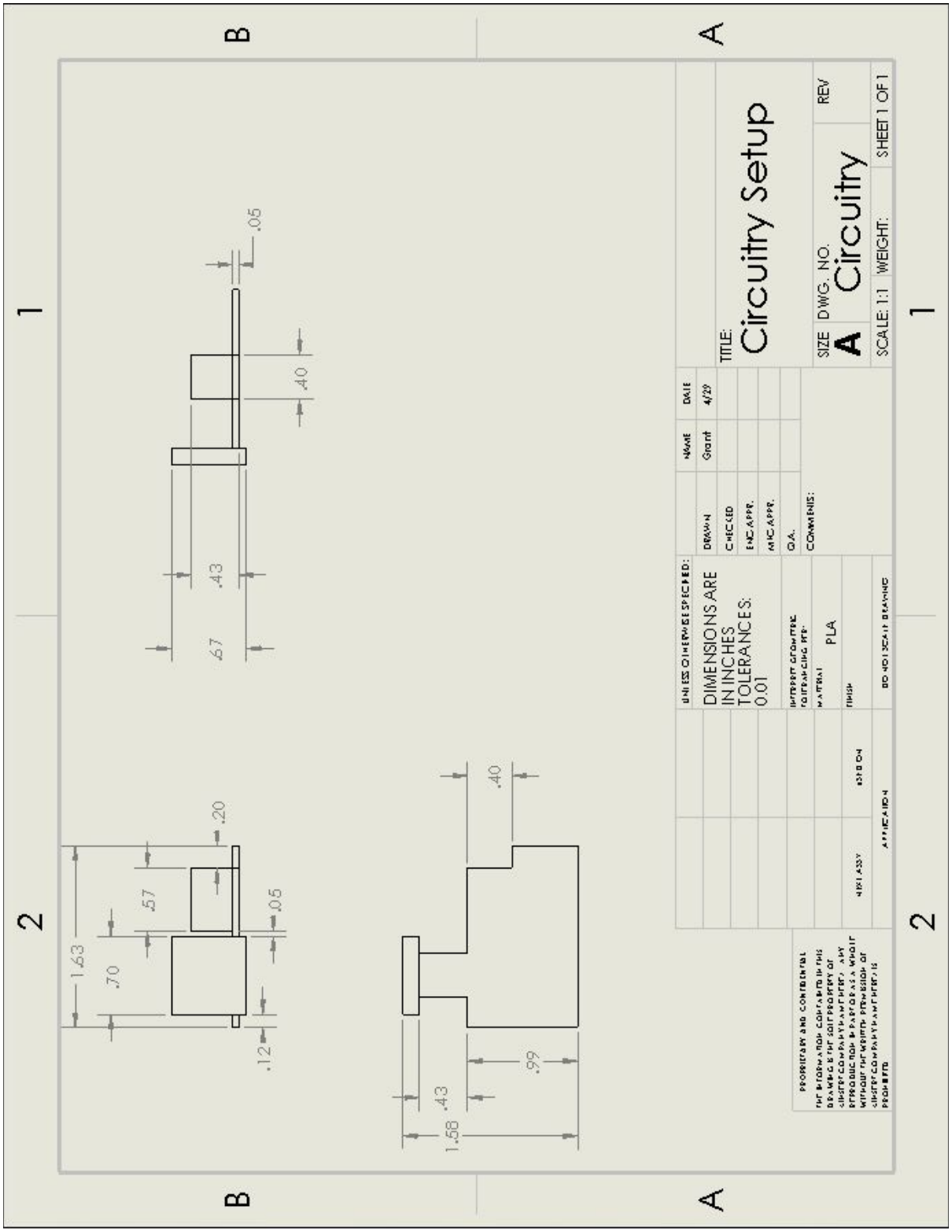

Figure A-5: Circuitry

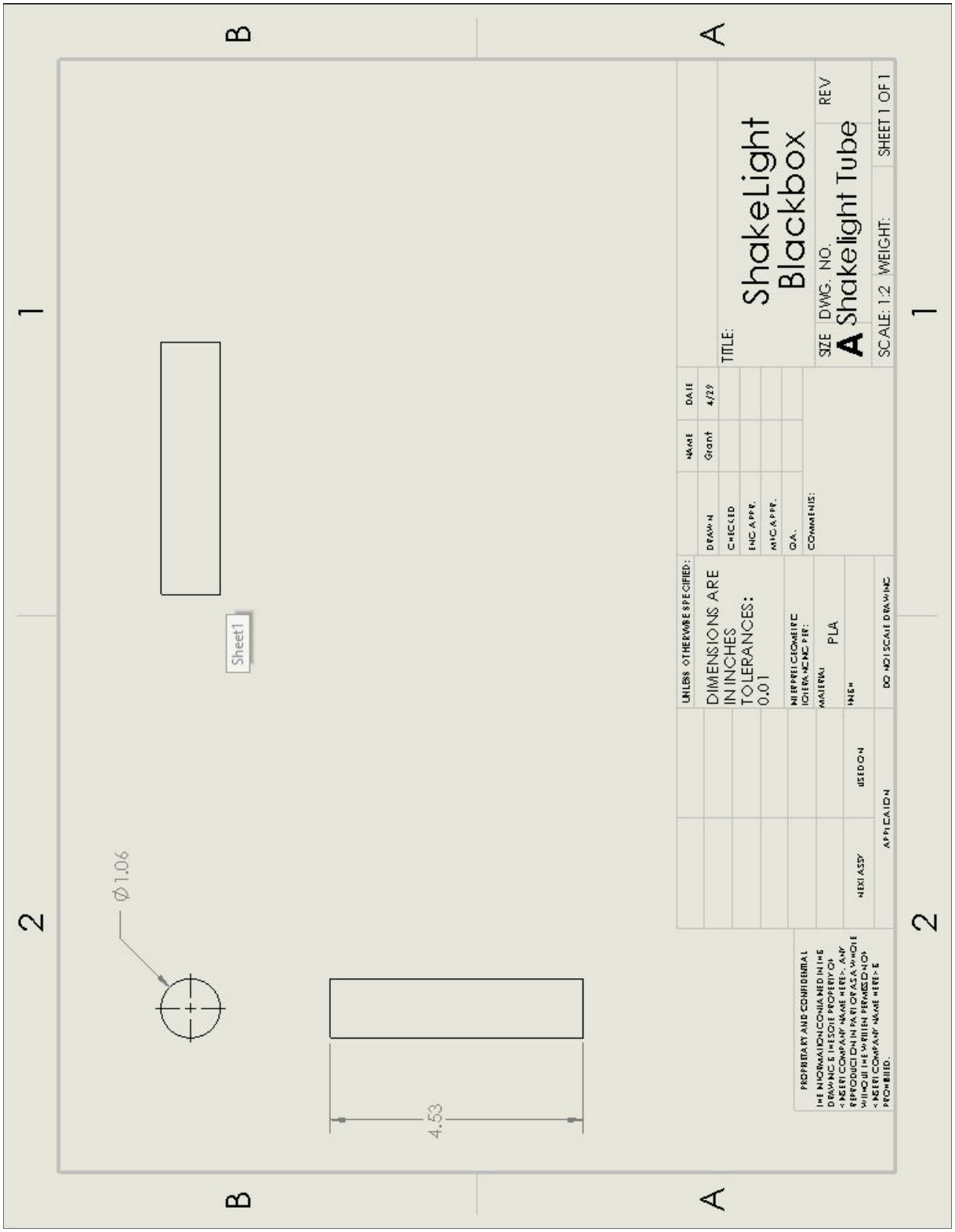

Figure A-6: Shakelight tube

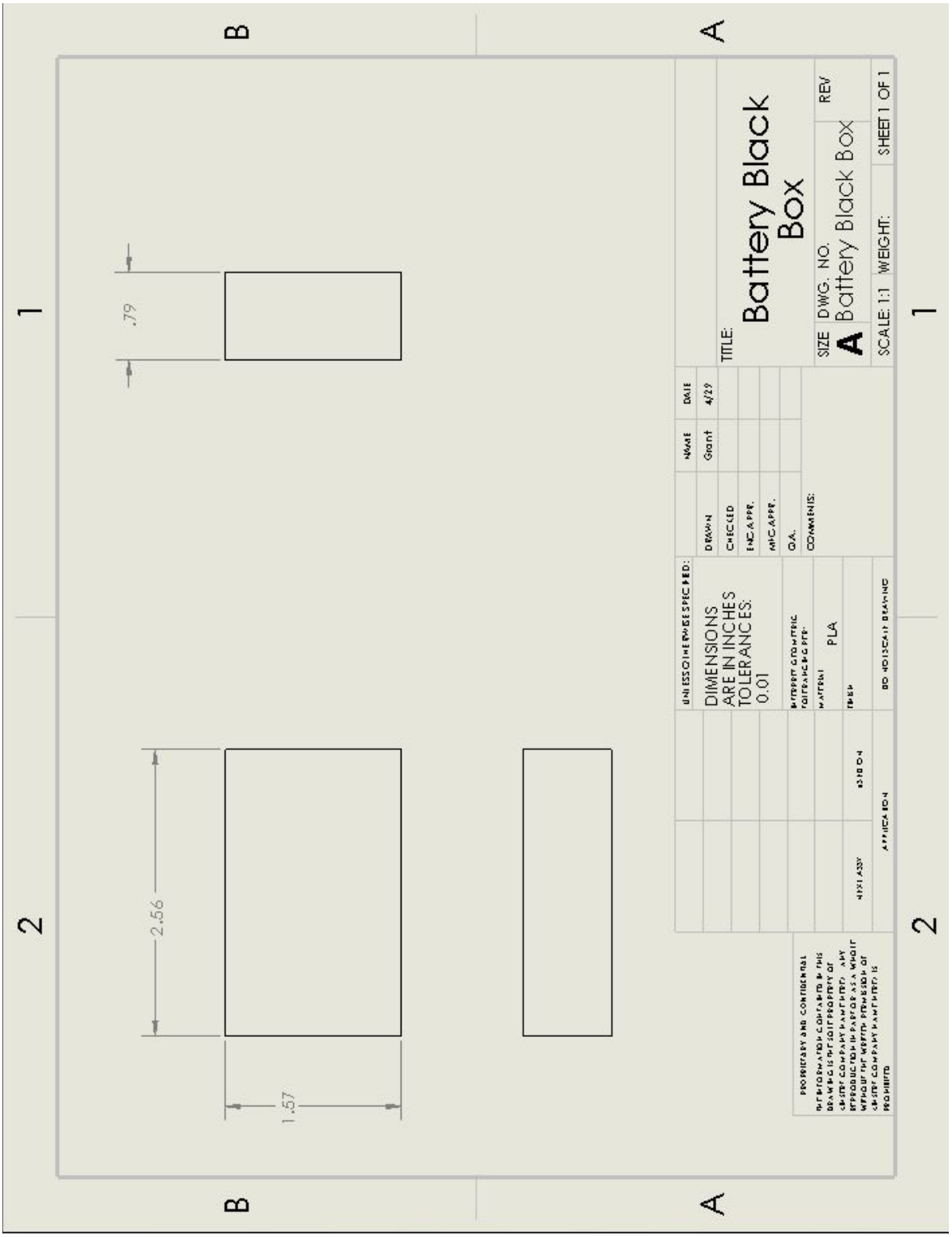

objec

Figure A-7: Battery Blackbox

APPENDIX B: Snap Fit Calculations

Mechanical Properties for PLA
(Filamentum, 2018)
Young's Modulus,
$E = 522,136\ psi$
Ultimate Tensile Strength,
$S_{ut} = 7687$
Flexural Strength,
$S_f = 12038\ psi$

Design Properties
Length, $l = 0.400\ in$
Depth, $h = 0.100\ in$
Width, $b = 0.100\ in$
Head height, $t = 0.125\ in$
Deflection, $\delta = 0.0245$

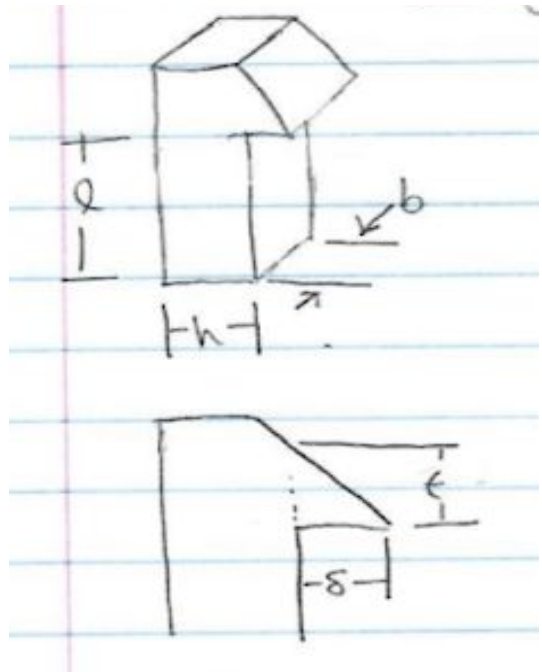

Figure B-1: Snap fit variables

Design Constraints
Push down force, $F = 5\ lb$
Pull up force, $P = 5\ lb$

Bending Strength/Strength in Flexure

$$\sigma_f = \frac{Mc}{I} \qquad c = \frac{h}{2}\ I = \frac{bh^3}{12}$$

$$\sigma_f = \frac{6Fl}{bh^2} = \frac{6\,(5\ lb)\,0.4\ in}{0.1\ in\,(0.1\ in)^2} = 12000\ psi < S_f$$

Buckling

$$F_b = \frac{\pi^2 EI}{4l^2} \qquad I = \frac{bh^3}{12}$$

$$F_b = \frac{\pi^2 Ebh^3}{48l^2} = \frac{\pi^2\,(522136\ psi)\,0.1\ in\,(0.1\ in)^3}{48\,(0.4\ in)^2} = 67.1\ lb >$$

Axial Stress

$$\sigma_a = \frac{P}{bh} = \frac{5\ lb}{(0.1\ in)^2} = 500\ psi < S_{ut}$$

Head Shear

$$\tau_h = \frac{3P}{2tb} = \frac{1.5\ (5\ lb)}{0.125\ in\ (0.1\ in)} = 600\ psi < S_{ut}$$

Deflection

$$\delta = \frac{Fl^3}{3EI} \qquad I = \frac{bh^3}{12}$$

$$\delta = \frac{4Fl^3}{Ebh^3} = \frac{4\ (5\ lb)\ (0.4\ in)^3}{522136\ psi\ (0.1\ in)^4} = 0.0245\ in$$

APPENDIX C: Bill of Materials and Cost Analysis

Table C-1: All Materials Purchased

Bill of Materials and Cost Calculations							
Manufacturer	Part #	Part Name	Description	Quantity	Units	Unit Cost	Cost
Plusivo	EAN0616639927610	Resistor Assortment Kit	Resistor Assortment Kit - Set of 600 Assorted Resistors from 10 Ohm to 1 MOhm in a Box- Metal Film Resistors Variety Pack with 30 Values Plus Thermistor, Photoresistor and 5 LEDs from Plusivo	1	1	$8.99	$8.99
Bridgold	Bridgold-37	TIP Transistor	Bridgold 20pcs TIP125 PNP Darlington Bipolar Power Transistor -60v HFE:1000,3-Pin	1	20	$0.44	$8.79
ASEMI	GBPC3510	Bridge Rectifier	(Pack of 2 Pices) ASEMI GBPC3510 Through Hole Single Phase Bridge Rectifier Diode with Heat Sink 35A1000V...	1	2	$4.34	$8.68
Panasonic	Panasonic FM Series	Capacitors	6 pcs Panasonic FM Series Capacitors - 25V 330uf Ultra Low ESR	1	6	$1.43	$8.58
BNTECHGO	ECW30AWG025LB	Magnet Copper Wire	BNTECHGO 30 AWG Magnet Wire - Enameled Copper Wire - Enameled Magnet Winding Wire - 4 oz - 0.0098" Diameter 1 Spool Coil Red Temperature Rating 155℃ Widely Used for Transformers Inductors	1	1	$7.19	$7.19
AFANTY	B07R4JY348	Neodymium Magnets	AFANTY Neodymium Magnets, 14 Pack Powerful Rare Earth Magnets, 1.26"D x 1/8"H Permanent Strong Magnets, for Fridge, Whiteboard, Garage, Office DIY	1	14	$1.21	$16.99
Eastrans	737504987468	Vinyl Tubing	10ft x 3/4" ID Clear Vinyl Tubing, Flexible Hybrid PVC Tubing Hose, Lightweight Plastic Tube UV Chemical Resistant Vinyl Hose, BPA Free and Non Toxic	1	1	$12.99	$12.99
totalElement		Large Neodymium Magnet	totalElement 1 x 1 Inch Large Strong Neodymium Rare Earth Cylinder Lift Magnet N48 (1 Magnet)	1	1	$18.99	$18.99
AmazonBasics	COR00003	9V Rechargeable Batteries	AmazonBasics 9V Cell Rechargeable Batteries 200mAh Ni-MH - 4-Pack	1	4	$3.50	$13.99
LampVPath	8541545355	9V Battery Clip	LAMPVPATH (Pack of 5) I-Type 9V Battery Connector, 9 Volt Battery Clip, 9V Battery Clip Connector with Wire and Hard Buckle Plastic Housing	1	5	$1.00	$4.99
Loctite	1363589	Super Glue	Loctite Ultra Gel Control Super Glue, 4-Gram Bottle, Clear, Model:1363589	1	1	$3.97	$3.97
Pololu	S7V7F5	Voltage Regulator	Pololu 5V Step-Up/Step-Down Voltage Regulator S7V7F5 (Item: 2119)	2	1	$9.99	$19.98
PharmaLUX		Shake Light	Shake Light 40 Rechargeable Flashlight	1	1	$29.95	$29.95
Varta	55608303015	3.6V NiMH Battery	Varta 3/V80H 2 Pin 3.6V 80mAh NiMH Battery 55608303015 FAST USA SHIP	2	1	$6.10	$12.20
Foxnovo	CECOMINOD016729	Heat Resistant Tape	Foxnovo High Temperature Heat Resistant Tape Polyimide Film Adhesive Tape (20mm33m)	1	1	$8.39	$8.39
SparkFun		MicroUSB Plug	SparkFun USB MicroB Plug Breakout	2	1	$6.95	$13.90
Charlotte	PVC 07100 1000	1-1/4 inch 5 FT PVC Pipe	1-1/4 inch 5 FT PVC Pipe	1	1	$4.22	$4.22
						Taxes	6.78
						Shipping	43.56
						Total Cost	$253.13

Table C-II: Final Product of Kinetic Power Pack

Bill of Materials and Cost Calculations							
Manufacturer	Part #	Part Name	Description	Quantity	Units	Unit Cost	Cost
PharmaLUX		Shake Light	Shake Light 40 Rechargeable Flashlight	1	1	$29.95	$29.95
		Lithium Ion Battery	Lithium Ion Battery from Portable Charger	1	1	$19.99	$19.99
Pololu	S7V7F5	Voltage Regulator	Pololu 5V Step-Up/Step-Down Voltage Regulator S7V7F5 (Item: 2119)	1	1	$9.99	$9.99
SparkFun		MicroUSB Plug	SparkFun USB MicroB Plug Breakout	1	1	$6.95	$6.95
		3D Printed Case	3D Printed Case for Device	1	1	$32	$32
Starument	8541756268	Starument Reusable Cinch Straps	Premium Multipurpose Quality Hook and Loop Safety Straps	1	2	$0.53	$1.07
						Total Cost	$100.07