Design and Construction of Modern University of Virginia Themed Pinball Machine

A Technical Report submitted to the Department of Mechanical and Aerospace Engineering

Presented to the Faculty of the School of Engineering and Applied Science

University of Virginia • Charlottesville, Virginia

In Partial Fulfillment of the Requirements for the Degree

Bachelor of Science, School of Engineering

Benen Crombie

Fall, 2023

Technical Project Team Members

Mina Ansari, Olivia Bearman, Phillip Bongiorno, Adam Centanni, Ian Chang, Thomas Cook, Benen Crombie, Scott Durkin, Ethan Green, Tom Habron, Matthew Leclair, Isaac Leshok, Jacob Leynes, Gabriel Lu, Will McClung, Patrick Nguyen, Keith Tam

On my honor as a University Student, I have neither given nor received unauthorized aid on this assignment as defined by the Honor Guidelines for Thesis-Related Assignments

Gavin Garner, Department of Mechanical and Aerospace Engineering

Table of Contents

Chapter 1: Introduction and Background 3
Chapter 2: Mechanism Design 5
2.1 Rotating Rotunda 5
2.2 Drop Targets 16
2.3 Pop Bumper 24
2.4 Slingshot Mechanism 32
2.5 Diverter Gate 35
2.6 Steam Tunnel Trap Door 41
2.7 Bollard Post 45
2.8 Cavman Spinning Target 53
2.9 Rotating Birdman Statue 58
2.10 RGB LED Scoreboard 62
2.11 Ball Return and Ball Launch 67
Chapter 3: Feature Design (Solid Modeling) 71
3.1 Model Rotunda 71
3.2 Beta Bridge 75
3.3 Upper Playfield Ramp 79
3.4 Nextion Screen Mounts 82
3.5 Playfield Mounting Rails 85
3.6 Logi Speaker Mount 86
Chapter 4: Gameplay, Electronics, and Software Development 91
4.1 Overall Gameplay 91
4.2 Custom Solenoids 93
4.3 Sensor Scanner System 97
4.4 Solenoid Driver Circuit 101
4.5 Power Supply Modeling 103
Chapter 5: Conclusion 106
Final Thoughts 106
Future Work 107
References 109

Chapter 1: Introduction and Background

The peak of pinball may have occurred in the 1970s and 80s, but in the last decade or so it has seen a strong resurgence. Competitive pinball attendance has grown almost tenfold from 2009 to 2017 (Kriesel, Fig. 3). The coronavirus pandemic has also aided this popularity rise, causing families to turn to home entertainment such as a pinball machine (Park, 2020). Stern Pinball, the leading pinball manufacturer today, experienced a five-fold sales increase and a record number backlog of orders during the pandemic (Park, 2020).

This technical project will contribute to this trend: its goal is to design and construct a custom, UVA-themed pinball machine. From the colors and artwork to the structure and play features to the many UVA-specific jokes and motifs, the theme will be well integrated. This will make for a much more enticing and engaging game. It will be installed in the game room at 1515, a UVA-owned study space and social gathering point on "The Corner," here in Charlottesville. The machine will attract students to 1515 to study and congregate, in turn improving academic excellence and social bonds.

This homemade pinball project was originally attempted by a capstone group back in 2016, but the machine's construction was incomplete when the group graduated. Our team learned from our predecessors primarily by recognizing that it would take collective responsibility and personal dedication to overcome the challenge. We drew on our knowledge of mechanical design and electrical circuitry. These mechanical skills include computer-automated design in SolidWorks, 3D printing, laser cutting acrylic, machining and metalwork, woodworking, and knowledge of adhesives and mechanical fasteners like screws. On the electrical side, we will use the Propeller 2 Microchip running the Spin2 computer language, and

there will be circuitry and wiring involved. We will look to other pinball machines as references, especially the Black Knight, as well as hobbyists on YouTube.

Chapter 2: Mechanism Design

2.1 Rotating Rotunda

Introduction:

The Rotating Rotunda serves as an aesthetic to the game and a part of the gameplay. Since the Rotunda is the heart of this university, it was important to make it the center of the game. The goal of the design was to have the Rotunda rotate randomly, but as the game became harder, it would act as a block to the upper playfield.

Design:

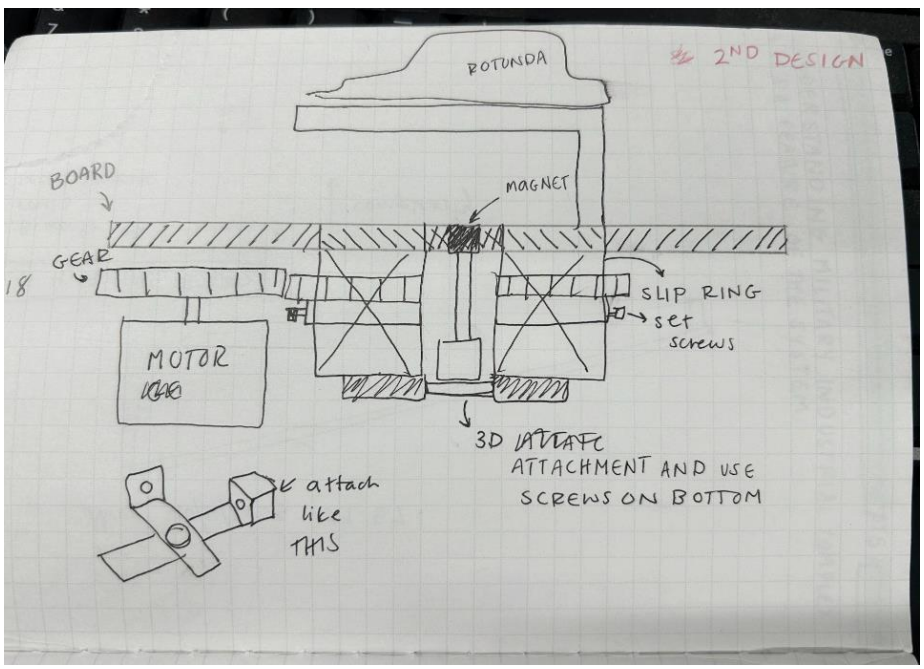

Fig. 2.1.1. First draft of Rotation design

This design uses a rotating slip ring that acts similarly to a bearing. The rotunda would be mounted to the outer part of the slip ring, which allows the inner diameter of the ring to remain stationary. The linear actuator is attached to a 3D printed piece that connects to the bottom of the slip ring. This allows the actuator to stay in place and act as a ball trap under the Rotunda. A

permanent magnet would be attached to the tip of the actuator so the ball can “lock” when it is sensed under the Rotunda. As for the gears, they are a 1:1 ratio which allows the encoder in the motor to read the position of the Rotunda. The idea is to have the base holding the Rotunda flush with the board so that when the linear actuator pulls the magnet down, gravity pulls the ball back to the player. This way the design will not require a popping mechanism to get the ball out.

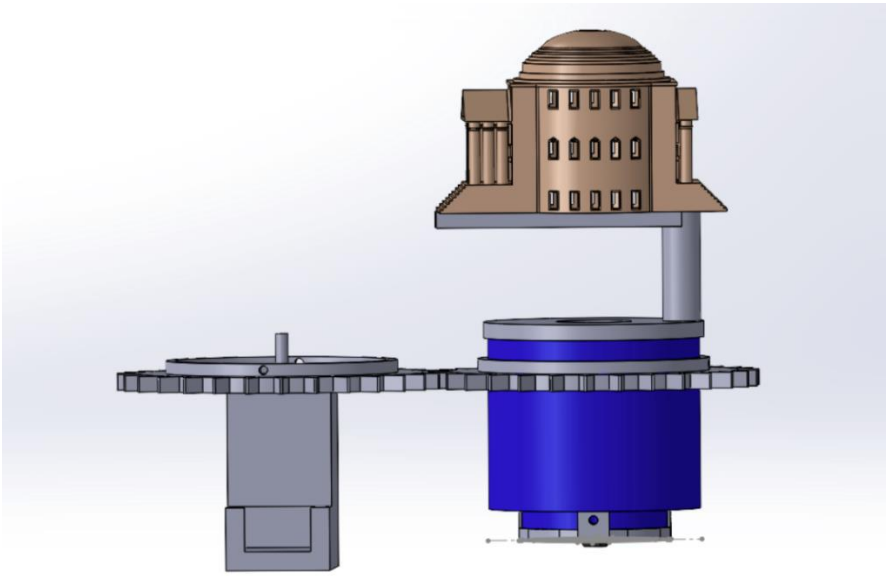

Fig. 2.1.2. First iteration in Solidworks

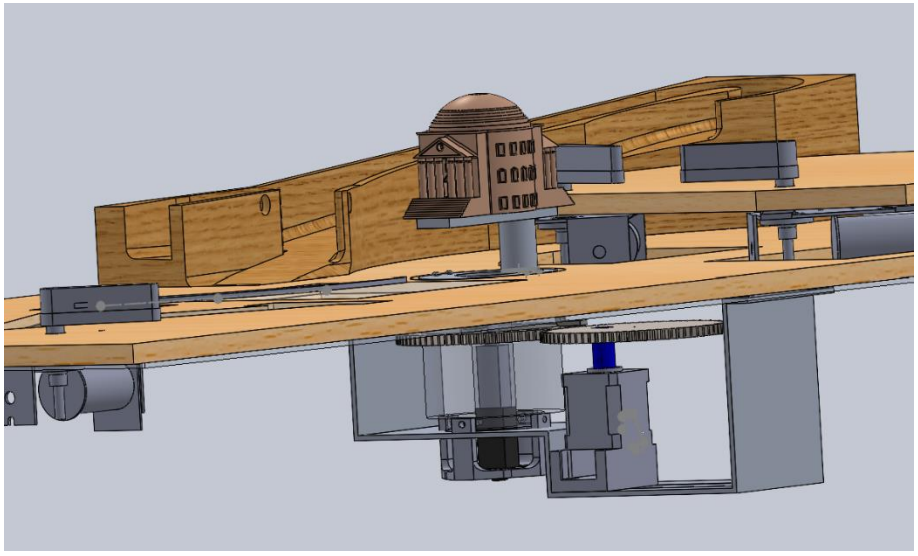

Fig. 2.1.3. SOLIDWORKS model of the Rotunda on the playfield.

The main concepts of the design remained the same throughout the iteration process. However, how the parts fit together changed drastically. The design that changed the most was the Rotunda holder. In Figure 2.1.2, the holder sat flush on the slip ring (blue). There was no way for it to sit on the slip ring without gluing them together. This design was not feasible because if any of the mechanisms fail, the entire system would have to be redone. The next iteration has bolts going from the base plate of the holder to threaded holes in the slip ring. However, the bolts were not flushed with the base plate and would cause issues with the ball rolling over them. The most current design, depicted in Figure 2.1.4, has it so the screws are countersunk into the plate. This allows for the base to remain flushed with the playfield. The support for the cantilever beam also changed so rubbery bands can sit on it and help cushion the impact the ball may have on the support. However, the hole for the wires in the support was too small to fit the number of wires needed. The base would also be welded to the support at the bottom, but the cantilever would be screwed into the top as shown in Figure 2.1.4. The Rotunda is held by countersink screws at the bottom of the cantilever beam as seen in Figure 2.1.5. The cantilever also changed so that the Rotunda would sit concentric with the center of the slip ring to avoid vibrations. The rectangular cut was added so that a sensor can be placed inside the Rotunda. This sensor would allow the game to know that the ball is trapped underneath and would then trigger the linear actuator to pull down the magnet which would release the ball.

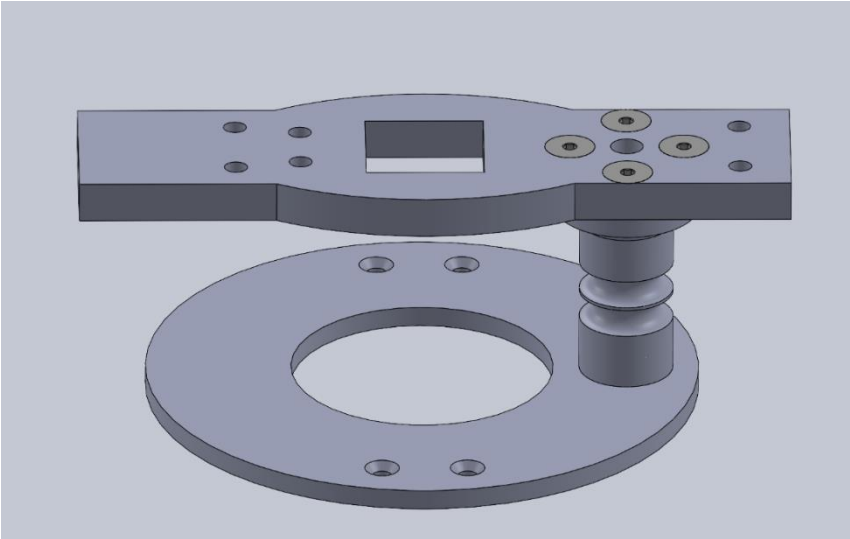

Fig. 2.1.4. Second iteration of the Rotunda holder

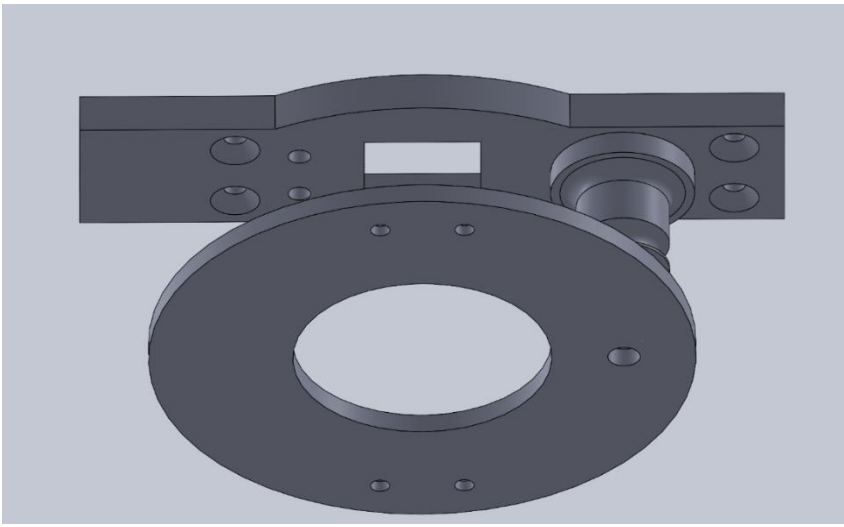

Fig. 2.1.5. Bottom view of Rotunda holder

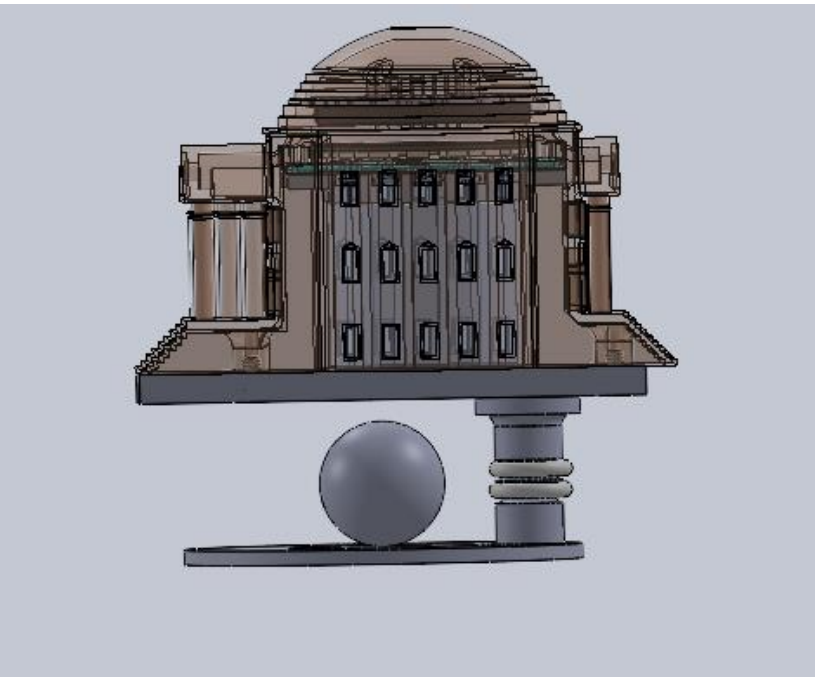

Fig. 2.1.6. Current assembly of Rotunda holder

The Rotating Rotunda design reduced weight and space on the playfield compared to the original 2016 design. The current prototype is shown in Figure 2.1.7.

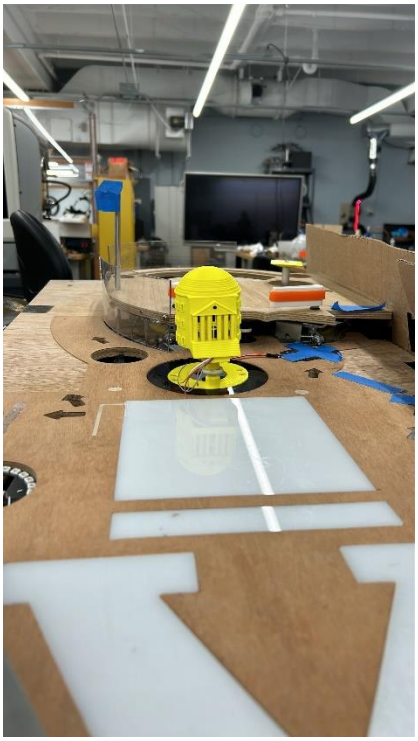

Fig. 2.1.7. Current rotating Rotunda prototype

Mounting:

The Rotating Rotunda assembly was mounted using a custom-made aluminum frame made from water jetted aluminum plates rivetted to aluminum L-Brackets. The use of the waterjet allowed for cutouts to be made in the frame, helping to reduce weight, and allowing for more complicated mounting options for the slip ring and motor. The first iteration of the mount (shown below) worked well at saving weight and holding the motor in place. The walls were rigid and lightweight, and the position of the motor could be adjusted to change the distance to the slip ring. There were problems with this design, such as how the slipring was not securely mounted and just sat on top of the mount. This was undesirable, as when the motor started to move, the slip ring would become unstable, and the gears would not mesh as well. Another problem with this design was that the walls did not allow the slip ring to sit deep enough into the machine, causing the plate to not be flush with the playfield, which was partially due to the prototype playfield not being as thick as our ideal, final product playfield.

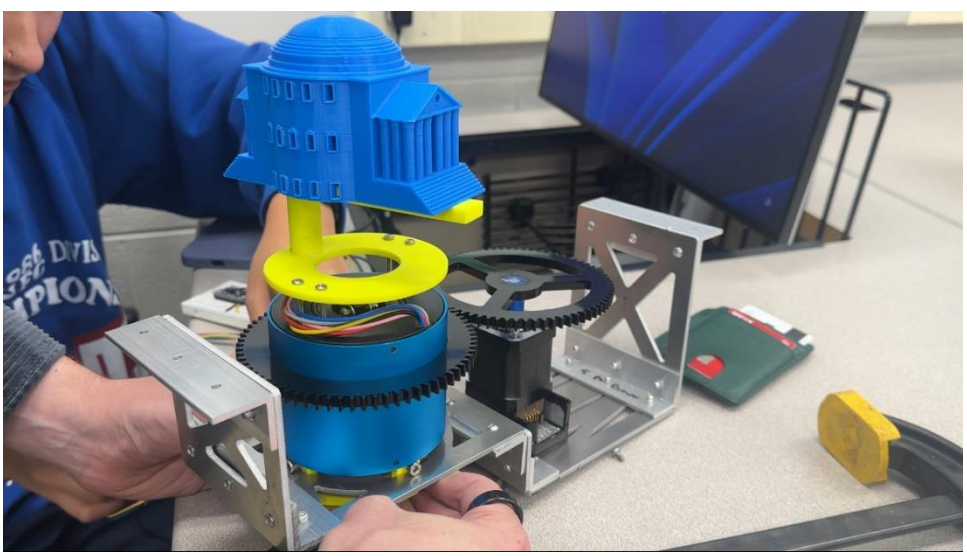

Fig 2.1.8. The original mounting setup for the rotating rotunda, where the slip ring (blue cylinder) must be held in place manually

This was solved in our second and final iteration, where the mount for the slip ring was changed and the walls on the sides of the mount were lengthened. Most notable was the slip ring mount, where we decided to have bolts hold the 3D printed bracket at the bottom of the slip ring. These bolts would thread into the playfield mount, holding the bracket at the bottom of the slip ring up. This both holds the slip ring rigidly in place and allows for the height of the slip ring to be adjusted, as it can be raised or lowered by tightening or loosening the bolts. A diagram of this can be seen below.

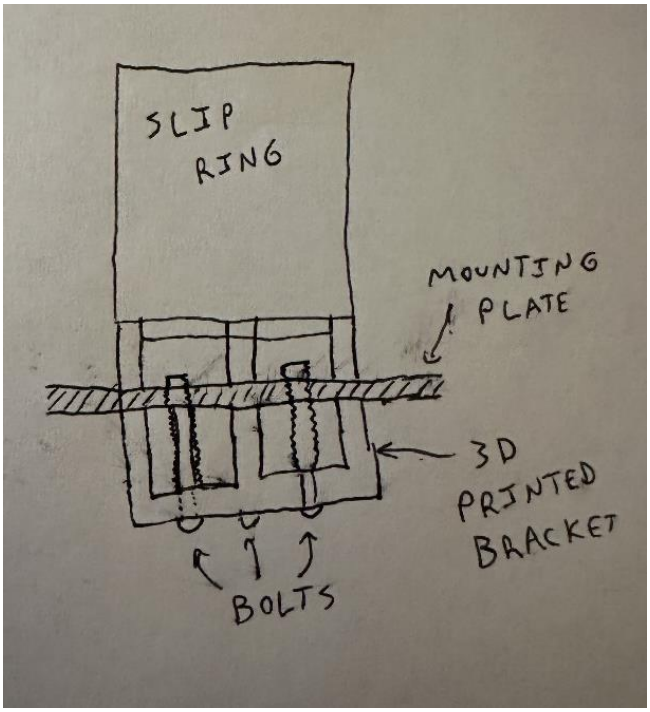

Fig 2.1.9. Diagram of the current slip ring mounting system

Lighting:

Just as the Rotunda is a landmark feature of the university, the rotating Rotunda feature is set to be a center piece of the game board. To integrate the rotunda into the game play, lights were added into the inside of the rotunda, so it could light up and flash along with the players advancements and game play.

Design:

When designing the rotunda's lighting, there were two main constraints: physical space and pin space connected to the main Propeller chip and the multiplexer sensor system. The inside of the rotunda is only about two inches in diameter. This reduces the amount of space for lights, wires, and mounting. Rather than having a light in each of the 30 windows, it was decided that each window column will have its own light. When acrylic is held up to light, the light diffuses through the acrylic piece, making it look lit up. On each side of the rotunda, it was decided that there would be acrylic bars behind each of the windows with a bright white LED at the top of each. To add some color, it was decided that an individually addressable RGB LED light ring would be incorporated inside as well.

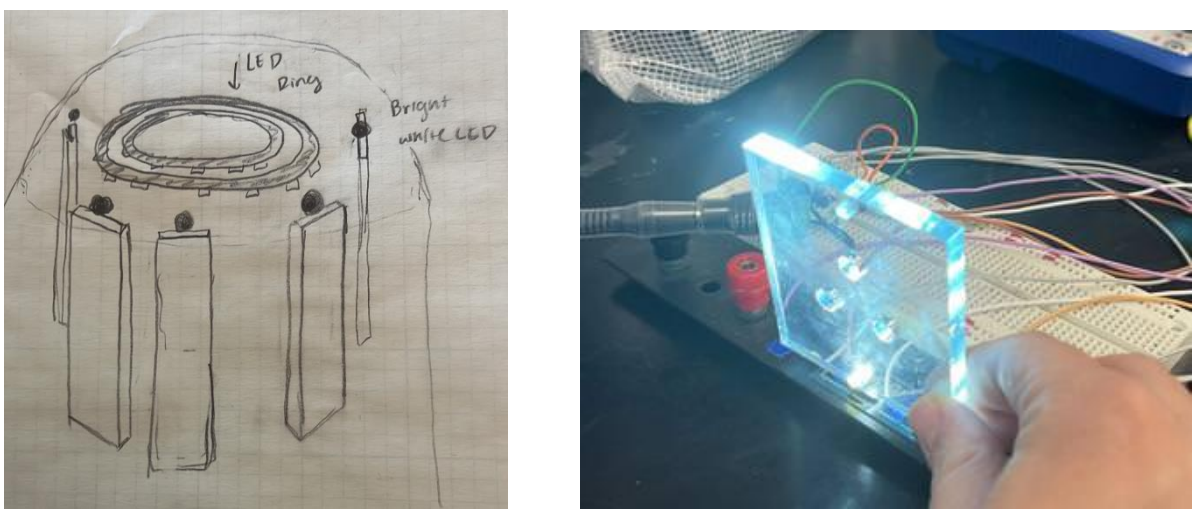

Fig. 2.1.10. Initial design idea for inside of the rotunda (left) and light diffusing through clear acrylic (right)

The other design constraint was having enough pin space to control all 10 LEDs and the LED ring. To accomplish this, a 16-bit analog multiplexer chip was used with a Darlington transistor array. This Multiplexer chip is described in more detail in section 4.3. This reduced the number of pins connected to the Propeller 2 chip to only 8 wires. The bright white LEDs run off

12 volts, while the multiplexer light ring runs on 3.3 Volts. In the end, a custom board was made to fit inside the Rotunda.

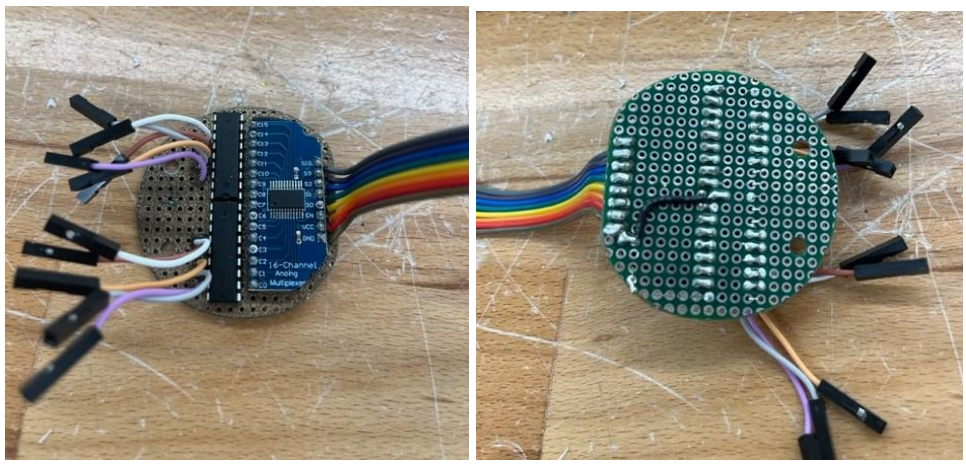

Fig. 2.1.11. Custom light control board with two Darlington transistor arrays, and 16-channel analog multiplexer.

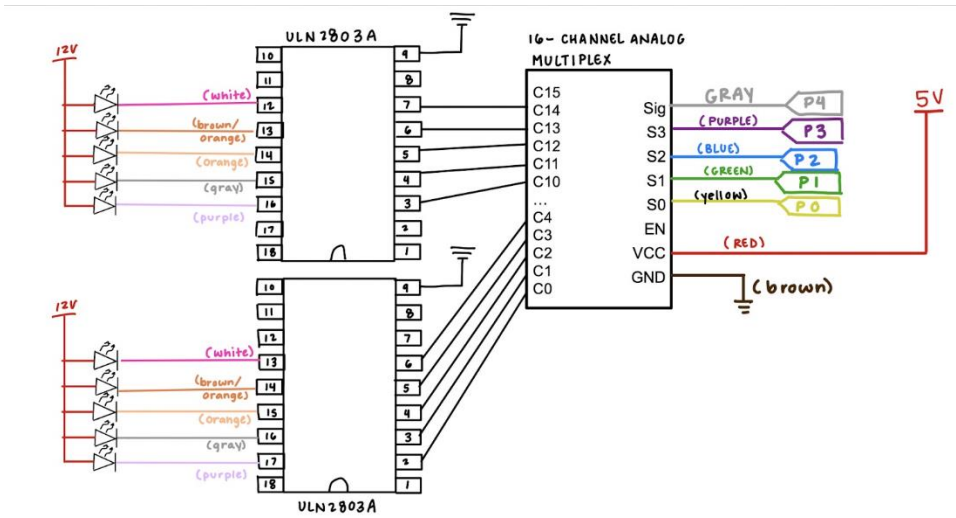

Fig. 2.1.12. Schematic of control panel. Does not include LED light ring

After we figured out how we wanted to design the inside of the rotunda, the configurations only varied slightly between each other. The window light diffuser was made completely out of acrylic. Each long bar was acrylic glued to a triangular spacer, so it would

wrap around with the inside of the windows. The initial design had slots at the top of each bar that were small enough to press fit in each of the LEDs to hold them in place.

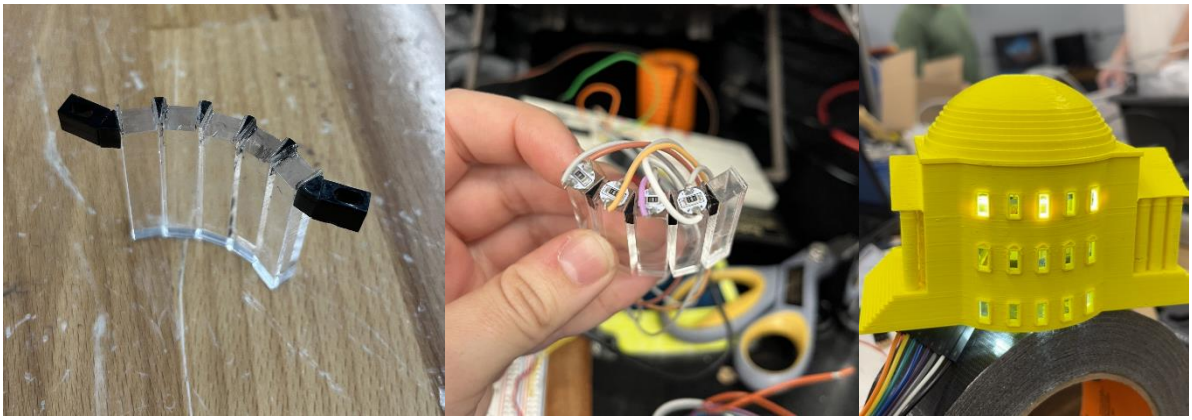

Fig. 2.1.13. Acrylic light diffuser assembly

The ends of the diffuser then had slots added to the end to allow them to be screwed into the rotunda. Instead of the LEDs being press fit into the diffuser, a light holder was added up at the top, and the LEDs were soldered around it.

Initially, we envisioned that the ring light would be inserted into the top of the Rotunda. It was first going to be held in place by 3D printed arms to hold the LEDs, but for simplicity it was decided that the LED ring would just rest on top of the LED ring. However, when coming together with all the wires we realized it would be hard to fit the light ring in at the top. Also, the Rotunda is sitting on top of a cantilevered beam, so it would obscure most of the light coming out from under it. As a result, it was decided that the ring could be mounted at the bottom of the rotunda, facing up.

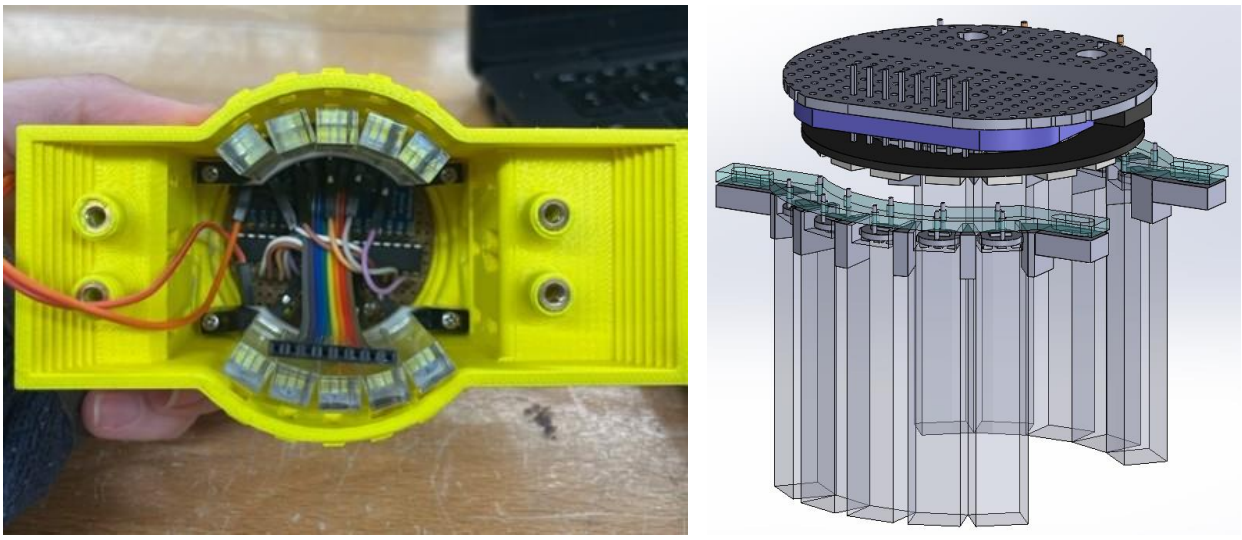

Fig. 2.1.12. Inside of rotunda lighting assembly. Final assembly without light ring (left) and original assembly design with light ring between the diffusers and control board (right)

Future Work:

Since 3D printing prints are very fragile, they would not last in real game play. The Rotunda holder would have to be made from aluminum, and the gears would have to be cut from aluminum as well. The first time the gears were cut, the teeth were uneven because of backlash from the mill, so it would be better to CNC the gears so that they mesh perfectly. The Rotunda also needs to be cast out of metal. Lastly, the permanent magnet center has to be constructed. A mount for the linear actuator has been made, but how the permanent magnet sits on the actuator needs to be worked out.

Unfortunately, the rod holding the Rotunda over the playing field is currently too small to fit all the wires needed through it. Only three wires fit through the rod; this would be enough for the light ring alone, but not enough with the multiplexer and the bright white LEDS. The post needs to be increased in size to incorporate all the wires needed. Right now, there are two pieces of acrylic holding in the bright LEDs soldered around them. In the future, it may be beneficial to use a copper PCB circuit board piece to hold the LEDs; this idea was considered, but there was

not enough time to see it through. Each of the LEDs could be soldered into the board with a 12-volt rail and separate sections for the cathode going to the Darlington transistor array. The Dupont connectors are taking up a lot of space in the top of the Rotunda, so this configuration could free up space within the top.

Also, the LED light ring is currently wedged in at the bottom around the diffuser rods. A more secure mounting to have the light ring at the bottom should be considered in the future. There is a little bit of code written up for both the light ring and the white LEDs, but in the future, more light patterns and special effects will need to be coded into the gameplay.

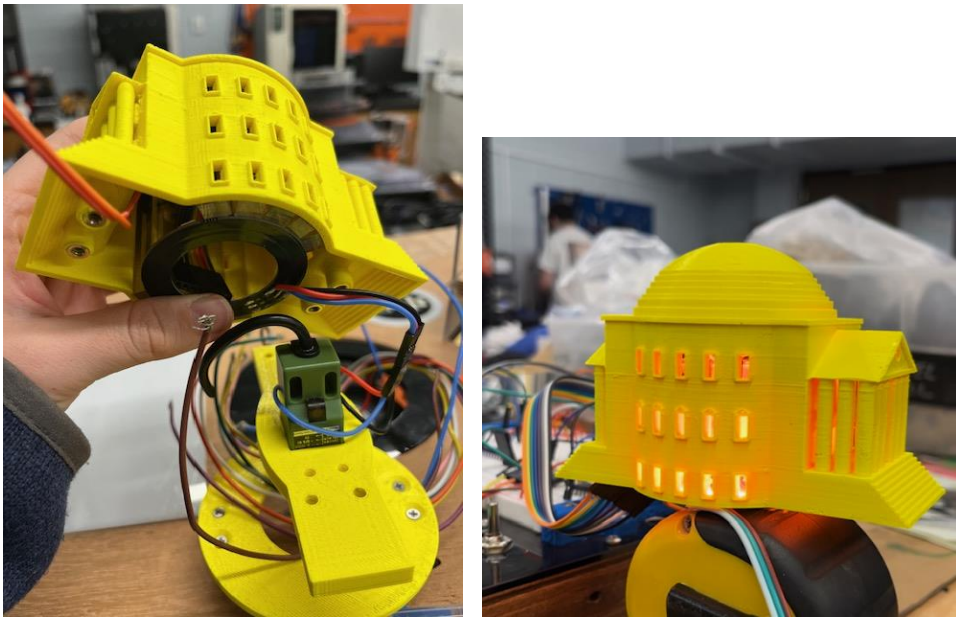

Fig. 2.1.14. Light ring at the bottom of the rotunda (left) and rotunda lit up by light ring at its bottom position (right)

2.2 Drop Targets

Introduction

Drop targets are a feature of pinball machines in which the player hits the ball into the target to achieve an objective and the target will fall indicating achievement. With our game

structure and requirements, several considerations emerged involving the mechanical capabilities of the drop targets.

To begin laying out the general framework of the design, our team referenced the manual of Jerseys Jacks' "The Hobbit" pinball machine. This provided a technical look into a commercial drop target design and provided a general idea of the necessary features. Like Jersey Jack's drop targets, our team wanted the ability to raise and lower the targets on command, not falling solely when the player hit them. This will allow us more flexibility and control in the game script.

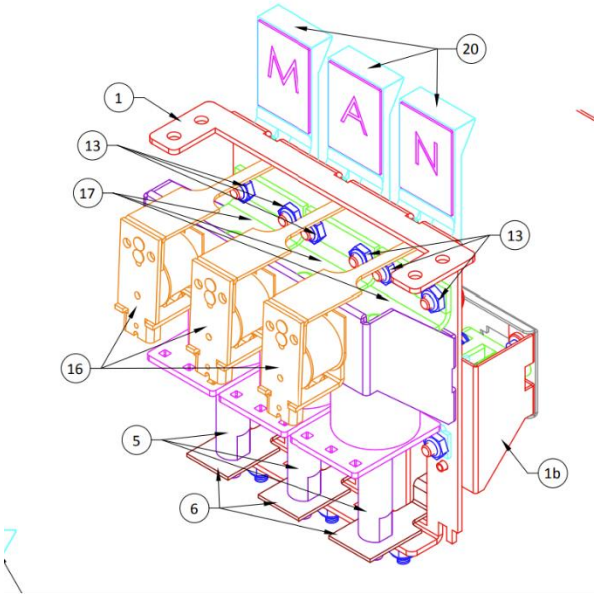

Fig. 2.2.1. Drop target design reference (Jersey Jacks 2018)

Our group initially considered three different methods of power for resetting the targets including a solenoid, a linear actuator, and an electromagnet. "The Hobbit" machine uses solenoids, chosen for their speed and power.

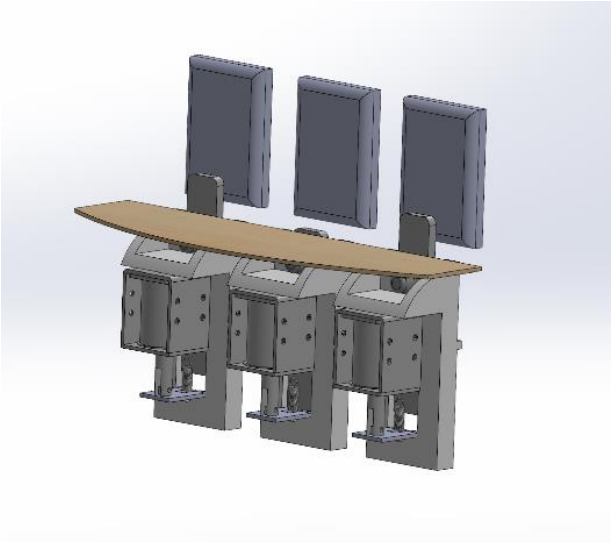

Fig. 2.2.2. Drop target design consideration

Ultimately, our team decided on a linear actuator as the power source for its durability and functionality. The linear actuator provides us with the ability to raise and lower our targets on command allowing for the unique experience we aim to create with our design. Over the course of the semester, our team modeled and manufactured 4 iterations of drop target assemblies, ultimately achieving a final design ready for play in the machine.

Design

First Iteration

Realizing the first iteration was one of the more difficult steps in the design process. The first prototype revealed a multitude of issues within the design. This is important to note, as these issues were not apparent in CAD. A mixture of modeling and reality is imperative to making designs moving forward.

The first prototype used springs as the force on the target to pull it down when it was hit and keep it on the ledge when activated. However, the springs did not have room to sit exactly where they needed to be in the assembly, and they were not centered on the target resulting in an unbalanced force pulling the target to the side. This prototype also had a Z frame profile with a

3D printed cradle for the actuator to sit in. The combination of these two led to inconsistencies in the target's raising and lowering motions as the cradle and frame would deflect under small loads.

Our team also wanted to be able to detect when the targets had fallen to attribute points of other rewards to the player. Our original design incorporated limit switches to detect this motion, but the targets did not always fall with enough force or to the same depth every time resulting in a design change in the following iterations. Finally, our frame for the target relied on L brackets cut from angle iron with a hacksaw. Due to our limited manufacturing capabilities, these brackets were inconsistent and led to holes and mounts not lining up or parts interfering with one another. After cutting down and adjusting interference points the prototype worked and served as an excellent proof of concept, inspiring further iterations.

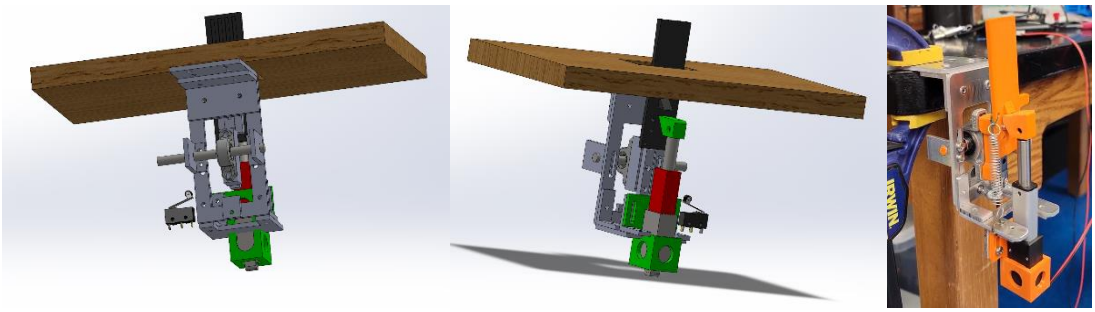

Fig. 2.2.3. Model and prototype of first iteration

Second Iteration

The second prototype improved upon the first by incorporating magnets to generate the forces needed to push the drop target down and pull the linear guide rail into an upright position. Springs take up more space and will wear out over the course of a few years. We wanted our design to be created so no one would have to periodically replace parts. The magnets were put in positions where they would repel each other as this generated the correct force vs displacement curve.

The frame of our second design was similar to the first. Instead of using the Z profile, we created a C-shaped profile with a plate on the bottom, back and top. Slimming the width of the assembly and the new profile shape reduced the total “footprint” of our design. The smaller footprint would allow more parts to be able to fit mounted under the pinball machine. Additionally, slots were added to the frame and to 3D printed parts whenever we could add them. The first design had no play in where parts could be adjusted, and this required us to sand parts down so they would fit together better.

The second iteration also included substituting the limit switch for an inductive proximity sensor. The inductive proximity sensor is more reliable than a limit switch. Additionally, we planned to make the final targets out of CNC'd aluminum which would work perfectly with the inductive proximity sensor. Some parts of our second design did not change at all. We still used a 3D printed cradle for the linear actuator mounting and homemade angle brackets to build the frame.

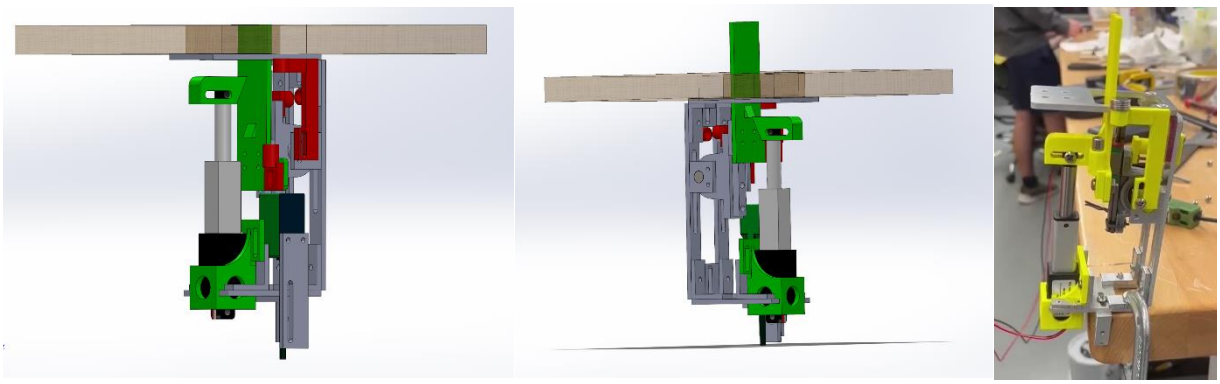

Fig. 2.2.4. Model and prototype of second iteration

Third Iteration

The third prototype saw a major shift in frame structure to decrease the size and weight while strengthening the assembly. The bottom piece of the frame was removed, and a side plate was added. The frame was made to include a top, back and side plate. This design was stronger,

slightly slimmer, required fewer homemade angle brackets, and the side plate made it easier to mount pieces of the assembly.

A 3D printed backstop was added to this frame to stop the pillow bearing and linear guide rail from over rotating. If the guide rail and pillow bearing would over rotate, the target would rub against the front of its slot. This friction would sometimes prevent the 3D printed target from falling. Some design subassemblies were updated in CAD to match their dimensions in real life. The incorrectly dimensioned subassemblies in CAD interfered with the manufacturing of the previous two iterations.

The addition of the side plate helped us redesign the linear actuator mount. The linear actuator was now mounted by squeezing a horseshoe shaped aluminum bracket around a rectangular aluminum spacer. This mount relies on the friction generated by tightening the aluminum horseshoe. Additionally, a bolt and spacer run through the hole at the bottom of the actuator as another point of contact. This actuator mount improved upon the previous design as it was stronger. The horseshoe bracket was attached around the metal part of the linear actuator which is also more favorable than 3D printed plastic around the linear actuator's motor. The motor will heat up during game play, so it is best to avoid putting any brackets or sleeves on it.

In this third design iteration we also decided to increase the number of magnets after experimenting with our previous design. The number of magnets attached to our drop target doubled to increase the repulsion force. The magnet holder above the drop target was made to be a line of magnets. This way the upper force was increased and even repulsion covered a larger area as the target was knocked back. We found the magnets to be finicky and if a line of magnets were not used, sometimes the drop target magnet would get stuck to the upper magnet.

The inductive proximity sensor was mounted differently in this third iteration. We mounted the inductive proximity sensor on the side piece at a 35º angle. This way the target would land on the center of the sensor, where the sensor is most sensitive to detecting an inductive object. The only part of this iteration that did not change was that homemade angle brackets were still used.

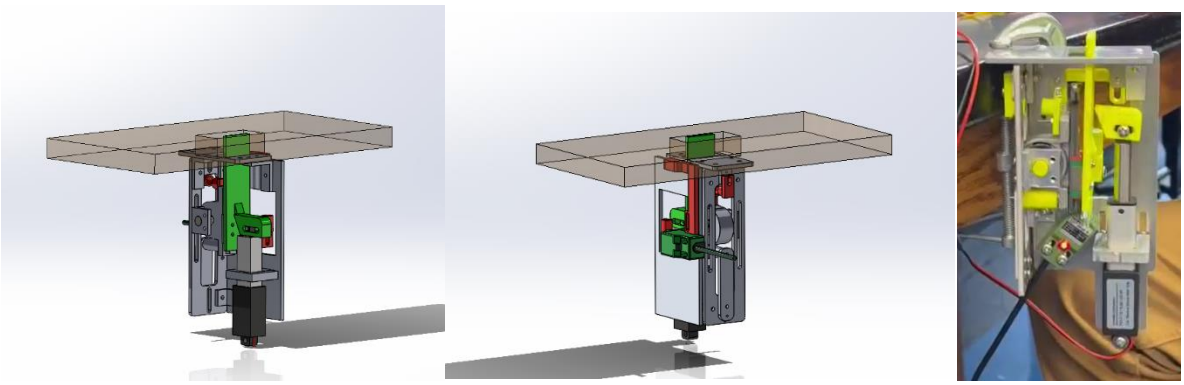

Fig. 2.2.5. Model and prototype of third iteration

Fourth Iteration

With a satisfactory third prototype our team began considering the gameplay and playfield fit. Our targets will be mounted below five-inch digital display screens to allow for custom targets that change throughout the game. Because of the width of these screens, we felt it better to include two targets per assembly for aesthetics and gameplay features. This led to an increase in width per assembly but a narrower profile per two targets that fit well with the display screens.

Our team also purchased premade L brackets to manufacture the design giving us a consistent shape and hole location. These brackets also allowed us to use screws and tapped holes instead of pop rivets. Some components were impossible to adjust with a screwdriver when the whole frame was assembled. Since the L brackets could be removed by unscrewing them, this allowed us to disassemble individual parts of the frame to adjust parts like the inductive proximity sensor.

In our final drop target design, we decided to cut away parts of the bottom of the target. Due to the play and imperfections in the pillow bearings, sometimes the bottom corners of the targets would hit each other or the side plate. This finalized the target geometry, so our team proceeded with CNC'ing them out of aluminum.

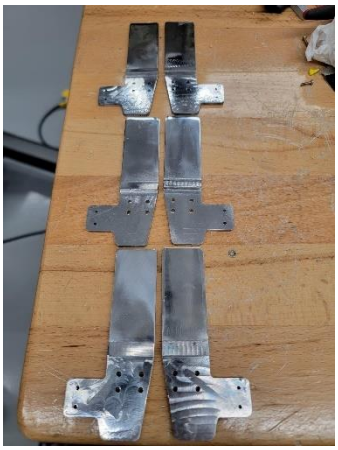

Fig. 2.2.6. Final version of polished and CNC'd aluminum drop targets

Previous designs had magnet holders attached by a single screw in a slot. This design was flimsy, and the strong magnetic forces caused the magnets to rotate out of alignment. All the single screw/slot combinations were replaced with a pair of screws and screw holes. The two points of contact in through holes create a much more robust attachment that will not fall out of alignment overtime. The attachment for the magnet holder on the pillow bearing was redesigned to also include an inset for the hex nut used. The embedded hex nut will make the part easier to install and will help prevent it from being loosened overtime.

The actuator adapter, magnet holder on the bearing and backstop were 3D printed parts that were intentionally created too large for this final design. The backstop was sanded down to keep the targets in as close to a perfect vertical position as possible. The actuator adapter was sanded down so it would be snugly attached to the linear actuator. In a similar fashion the magnet holder on the bearing was sanded down so it would be snugly attached to the pillow

bearing. Both pieces tended to rotate and fall out of alignment. The snug fit helped prevent this rotation.

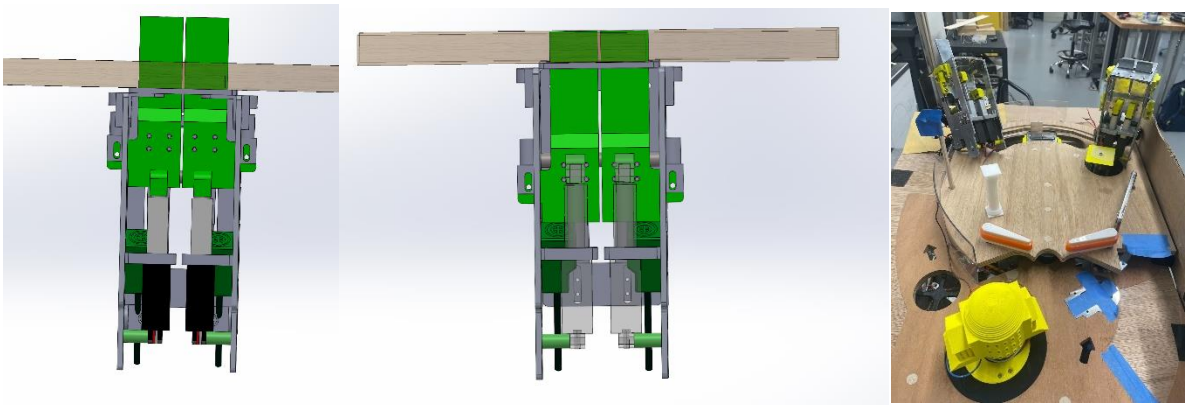

Fig. 2.2.7. Model and prototype of final iteration

Future Work

Our drop targets functioned perfectly for initial testing. Extensive testing for thousands of actuations is recommended before installation in the machine. Some parts might need to be adjusted in their slots however we do not anticipate any major design changes.

2.3 Pop Bumper

Introduction:

Pop bumpers are an integral component of traditional pinball machines and add an element of randomness that is a marquee feature of the game of pinball. When the ball touches the base of the pop bumper, a plate (usually metal due to the high force) will violently slam down on top of the ball, pushing the ball away from the bumper in a swift motion. The metal plate is often machined as an angled piece such that when it actuates downward, it will sandwich the ball against the playing field and shoot it out in the direction of the angled ramp. Aesthetically, there can be different paint schemes, images, LEDs, and more above the metal slamming plate.

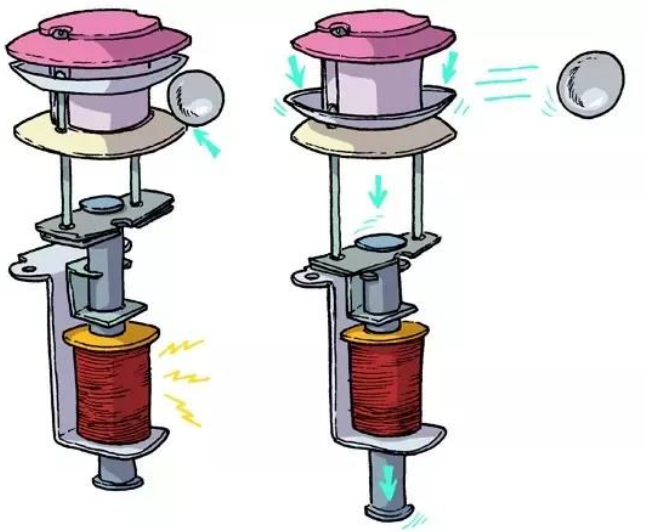

Fig. 2.3.1. A cartoon visualization of the motion of a pop bumper with solenoid actuation

As mentioned above, a pop bumper plays a pivotal role in the random nature of pinball. The mechanism itself can actuate multiple times per second, and, whenever it does actuate, the ball is shot out away from the bumper randomly at exceedingly high speeds, making it harder for the user to react and anticipate, and thus, adding some uncertainty and chance to the game.

Our team decided to use a solenoid to drive the actuation of the pop bumper. A solenoid itself is not very power efficient, but the sheer magnitude and instantaneous application of the force of a solenoid was the key factor in this choice. Furthermore, we desire a perfectly linear motion for our solenoid to only pull down the metal plate for actuation. Knowing that the solenoid's iron core motion can be clunky and unpredictable, we decided that in our design the iron core would be in some way attached to a ball bearing linear guide rail for it to perform a uniquely linear motion. A spring will also be added to the solenoid, so that the core can return to its upright position once the solenoid is deactivated.

Finally, the thought behind microcontroller automatic actuation is to have the ball act as a switch between the top and bottom metal plates (as it is conductive), with the top being energized

to around 3.3 volts and the bottom being grounded. The ball will enter the area of the pop bumper, and it will complete the circuit as it touches the top and bottom plates and sends a "high" signal to the brain of the machine, ordering the machine to fire the pop bumper's solenoid immediately. With these key factors and ideas in mind, we began the design process.

Design:

First Iteration

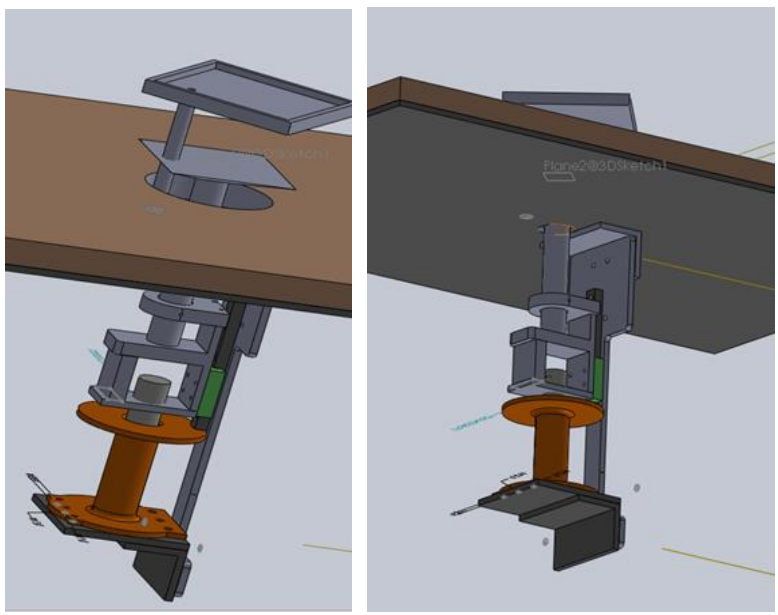

Fig. 2.3.2. SOLIDWORKS files of the first iteration of the pop bumper design with playing field reference

Prioritizing simplicity, the idea behind the concept of the design centers around the actuation of the solenoid. The first problem to tackle would be to find some way to translate the downward actuation of the solenoid to a "slamming" metal plate mechanism. The easiest way to do this would be to mount the solenoid vertically below the playing field, with the iron core side of it closest relative to the bottom plate of the field. This decision was made to avoid translating any horizontal motion into vertical motion. Once again, simplicity is key as it is easier to

manipulate a rod to shoot downward if the solenoid driving the actuation is also shooting downward.

Now the next problem to tackle is to Figure out the method in which the slamming metal plate that will be visible on the playing field will be moved by the solenoid's actuation. The simplest way to do this (as believed by our team) would be to link the metal plate to an aluminum rod (which would also be visible to the player), and then link the iron core to a material that would hold the rod vertically. This was done through a 3D printed part that would hold the threaded iron core through a hole fastened by a nut. The rod that was linked to the metal "slammer" plate would also be held by the 3D printed part by a stabilizing screw fed through a separate through hole that would extend through the material and rod.

The next choice was to both ensure the smooth linear motion of the iron core, and as mentioned above, this would be achieved by means of a linear guide rail. The linear guide rail would also be mounted to the 3D printed part that helped connect the iron core and aluminum rod. This 3D printed part serves as the "glue" to link important pieces of the pop bumper mechanism together and allow for fluid motion.

All the above was to be connected to a dog bone mount through the linear guide rail. In sum, the iron core, metal rod, "slammer," and linear guide rail are all linked through the 3D printed part, which makes them one piece. Therefore, the linear guide rail being mounted to a dog bone mount not only connects the linear guide rail to it, but all the aforementioned pieces as well. This dog bone mount provides an ease of connection to the playing field. A manufactured angle iron would be mounted to the dog bone separately on one side, with the other side connected to the playing field through 6-32 fasteners. Lastly, the solenoid would be held up by an angle iron by one side, with the other mounted to the dog bone on its lower end. Figure 2.3.2

provides a computer design software model of the described design, and Figures 2.3.3 and 2.3.4 show the manufactured piece mounted to the playing surface. For the first iteration, there was no time to manufacture the “slammer” that would be linked to the aluminum rod, so in Figure 2.3.4 only the rod can be seen above the playing field.

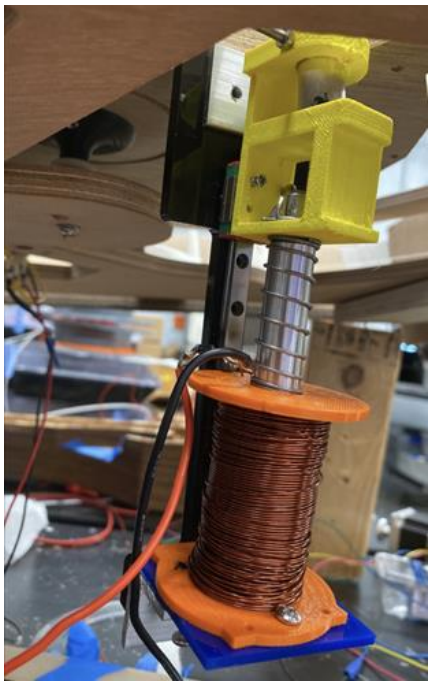

Fig. 2.3.3. First iteration of manufactured pop bumper mounted to playfield (underneath)

Fig. 2.3.4. First iteration of pop bumper mounted to playfield (top view)

Second Iteration

In response to defects and inconsistencies of the first iteration, a second design was formed, building from the first with minor changes to achieve a more functional design.

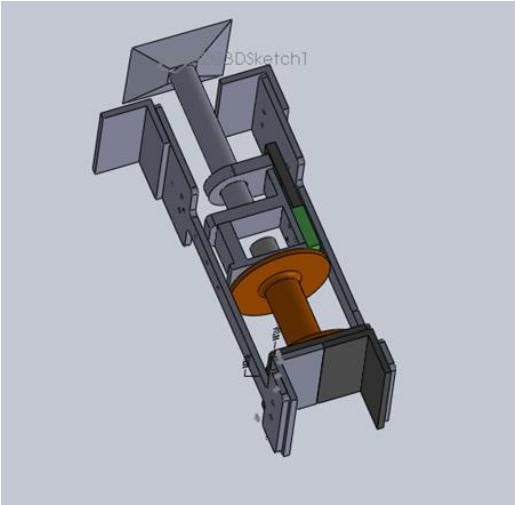

Fig. 2.3.5. SOLIDWORKS file of the second iteration of the pop bumper design

The first change was to add a second dog bone mount suspended from the playing field that would contain an angle iron resting on the back end of the solenoid. Previously, with the first iteration, we were able to see that, with only one dog bone mount attached to one side of the pop bumper, there would be a torque produced by the equal and opposite force from the spring as it was being compressed when the solenoid was activated. This is problematic because if a torque is produced, the vertical pop bumper will pitch to the side, and the iron core will rub against the plastic hole of the spool of the solenoid. If the iron core were to rub against the inner hole solenoid, there would be more inconsistency in the iron core's linear motion and inevitable wear in the plastic spool. Therefore, we decided that a second dog bone mount mirrored with the original containing an angle iron resting on the other side of the solenoid should be added to increase stability and counteract that torque produced by the spring force. Figure 2.3.5 provides a

computer design software model of the described design, and Figure 2.3.6 shows the manufactured piece before it was mounted to the playing surface. Figures 2.3.7 and 2.3.8 show the pop bumper as it is seen mounted on the playfield. Note that the “slammer” was 3D printed for the final demo, and it was never CNC’ed out of metal. This will be discussed in the “future work” section below.

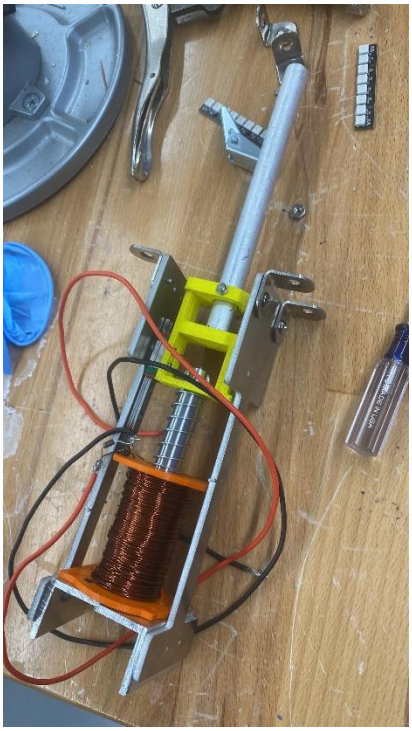

Fig. 2.3.6. Second iteration of pop bumper (pre-mounting)

Fig. 2.3.7. Second iteration of the pop bumper mounted (below playfield view)

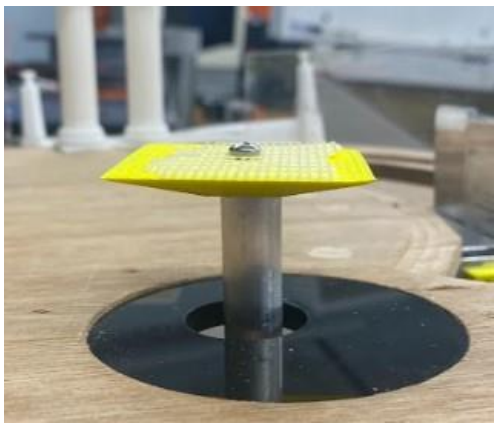

Fig. 2.3.8. Second iteration of the pop bumper mounted (above playfield view)

Future Work:

Future work for the pop bumper includes CNC'ing the slammer out of metal for full force of application. Secondly, the second design iteration opened a new idea for an even greater certainty of pure linear motion from solenoid actuation. The thought is to have the iron core be attached to two linear guide rails (one on each dog bone mounting piece) so that the mechanism could be both stabilized (as was the intention of adding a second dog bone) and have a more

accurate and precise downward linear motion. This idea still has to be conceptualized in computer design software and manufactured.

Furthermore, as mentioned above, there still must be microcontroller implementation. The intention is to still have the ball act as a switch between the top and bottom plate, with the top being energized to around 3.3 volts and the bottom being grounded. Once again, the ball will enter the area of the pop bumper, and it will complete the circuit as it touches the top and bottom plates and sends a “high” signal to the brain of the machine, ordering the machine to fire the pop bumper’s solenoid immediately. The wiring, code, CAD, and implantation still need to be fully actualized.

Finally, the aesthetics surrounding the pop bumper still need to be fully conceptualized, and there still must be thought put into LED implementation, spacing, and material.

2.4 Slingshot Mechanism

Introduction:

The slingshot is an essential component of every pinball machine. While the slope of the playfield is the source of the vertical motion of the ball, the slingshot is the main mechanism which imparts horizontal motion to the ball, adding a level of depth and uncertainty to the game. The slingshot mechanism is situated on the lower playfield immediately above the flippers and creates motion which moves the ball in the direction of the in-lanes and out-lanes.

Fig. 2.4.1. Slingshot mechanism on the Black Knight Pinball Machine

Design:

The slingshot's design was undertaken to make the mechanism as simple as possible. The actuation is produced using a custom-wound solenoid with its core fixed to a linear guide rail to achieve high precision in the movement. Although the force-time relationship of a solenoid is inefficient, the solenoid is an ideal choice for this mechanism due to its incredibly rapid actuation. The ball frequently moves at high speeds across the playfield, so speed of actuation was a primary factor considered in the design of the mechanism. The solenoid was coiled around a 3D-printed spool and uses an Iron core for actuation. The arms which operate the slingshot are also fixed to the linear guide rail with the core. The slingshot itself consists of a rubber band stretched in a triangle around three posts. This rubber band is then actuated by the arms of the mechanism when it is fired to ricochet the ball when it impacts the slingshot. These are fixed to a

frame which is mounted to the underside of the playfield. This mechanism is illustrated in Figure 2.4.2 below.

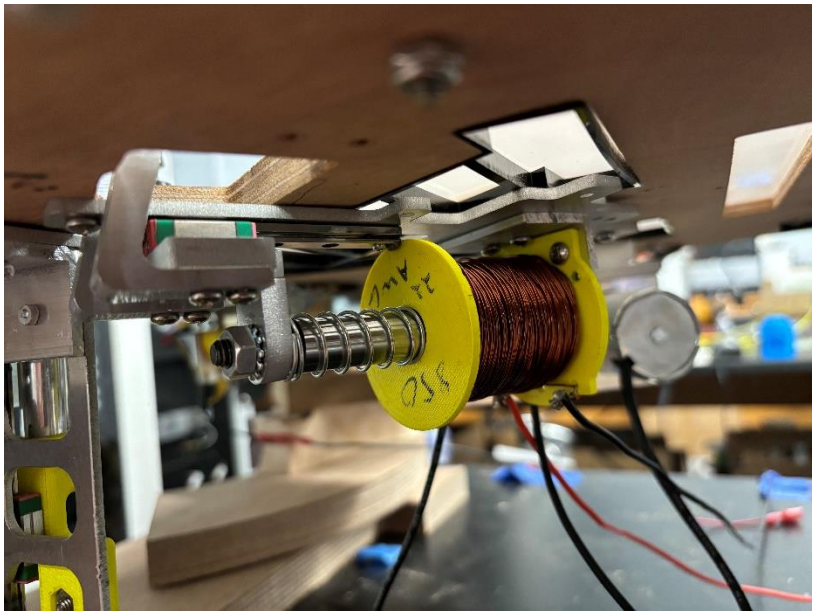

Fig. 2.4.2. Slingshot mechanism

The overall design of the slingshot remained consistent throughout the process, however the actuated arm and the frame which mounts the mechanism to the playfield went through several iterations of minor adjustments and optimization. The axial length of the solenoid was also adjusted in the design process.

A mechatronic system for operation of the mechanism was also developed. This system made use of a pair of optical infrared sensors located beneath the rubber band of the slingshot which would be triggered by the motion of the rubber band. This system would be operated via a pin on the Propeller microchip which controls the game to account for the potential occurrence of the switch-bouncing phenomenon. An or-gate would be used so that the slingshot would be actuated if either or both sensors were triggered. The sensor-mount assemblies were created, but they are yet to have been mounted to the playfield for testing and optimization.

Future Work:

The slingshot mechanism was fabricated and successfully tested while powered with 24 volts from an external power supply. Future work includes running the mechanism off 48 volts as would be the standard coming from the pinball machine's power supply. Future work for implementation includes fabricating another slingshot for the other side of the playing field as only one was fabricated and finalized for the concluding demonstration. The implementation of the already developed IR sensing and automatic microcontroller actuation must also be completed.

2.5 Diverter Gate

Introduction:

While designing the gameplay of a pinball machine, it is vital that the playfield controls the movement of the ball and which paths it can take. A simple method of accomplishing this is with a diverter gate. In this design, the diverter gate serves as a method of preventing the ball from draining to the lower playfield through the right-side ramp during early stages of the game while allowing the ball to still climb the ramp and pass through the gate. This one-way valve functionality permits the player to hold the ball motionless between the diverter and the flipper, releasing it slowly for an easily aimed shot, while still being able to enter the upper playfield through one of the only access points.

Fig. 2.5.1. Diverter gate illustrating the ability to hold a ball in place and illustrating the one-way gate functionality

In later stages of the game, when gameplay is intended to become more difficult, the diverter will rotate out of the way opening the right-side ramp to bidirectional travel. When the diverter is in the open position, any attempt to use the upper-right flipper to stabilize the ball will cause it to drain to the lower playfield instead of giving the player a more easily controlled shot.

Fig. 2.5.2. Diverter gate in closed and open position

Design:

First Iteration

The design process for the diverter gate went through many iterations and considerations. The first prototype design was driven by a DC brush motor with a D-shaft. This motor was chosen for its simplicity of implementation and the lack of microcontroller support required

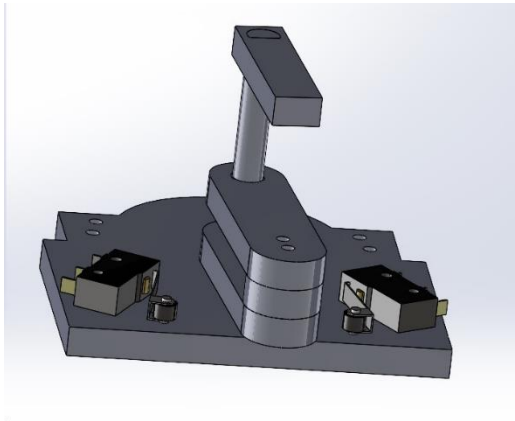

Fig. 2.5.3. Gate diverter prototype v1

A major issue with DC brush motors is their tendency to stall and burn themselves out if they encounter an obstacle which they cannot overcome. To mitigate this potential issue, two limit switches were incorporated into the circuit to physically open the circuit whenever the diverter gate reaches either side. A diode was placed with each limit switch to allow the H-bride circuit to always drive the gate in the direction opposite of its current position.

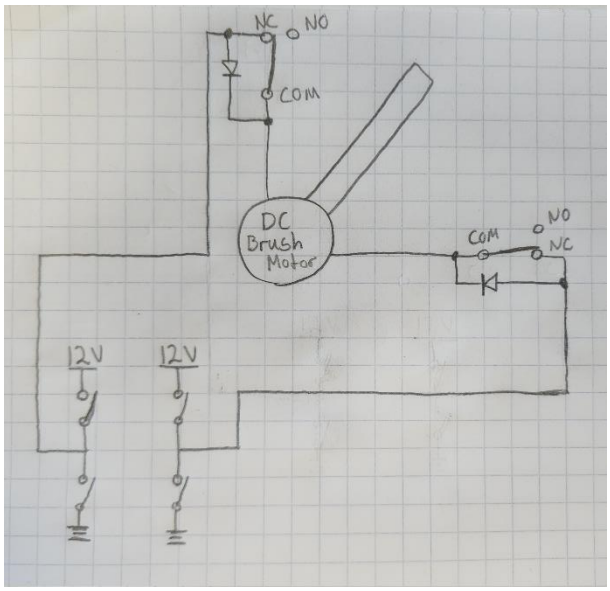

Fig. 2.5.4. Gate diverter circuit diagram including limit switches and diodes

Second Iteration

The second major iteration implemented many design changes. Primarily the motor mount plate was moved to be attached directly to the playfield. This allows for a more lightweight design that requires less space to be attached. Additionally, this change streamlines the shaft connections. With this design, a shaft collar was used to connect the shaft directly to the D-shaft using set screws. Slots were also added to the point at which the limit switches attached to allow for them to be adjusted. This increases the versatility of the design and makes the endpoints of the diverter gate dynamic. A bearing was also added to increase the stability of the main shaft and support horizontal forces.

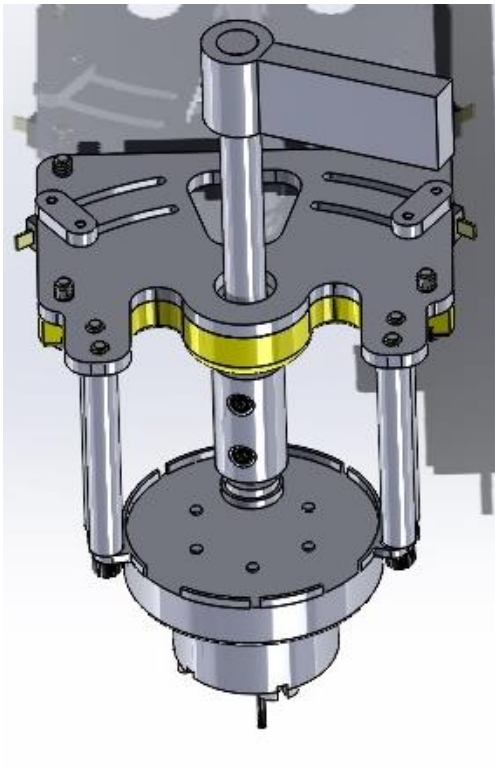

Fig. 2.5.5. Gate diverter prototype v2

Third Iteration

In the third iteration, the gate mechanism was refined. The gate was lengthened significantly to allow the mechanism to be mounted next to the flipper while still accomplishing its designed function. Additionally, a spring-loaded hinge was added to create a one-way gate within the diverter. The gate was constructed from a lattice to minimize weight and maximize visibility. There was a concern that the ball would interact with the gate in an unpredictable manner due to the irregular geometry, but after testing this was determined to not be a significant issue. The gate was welded to the shaft, and the arm that triggers the limit switches was welded to the shaft collar. This was done to make the connection process easier and allow for simple assembly and disassembly.

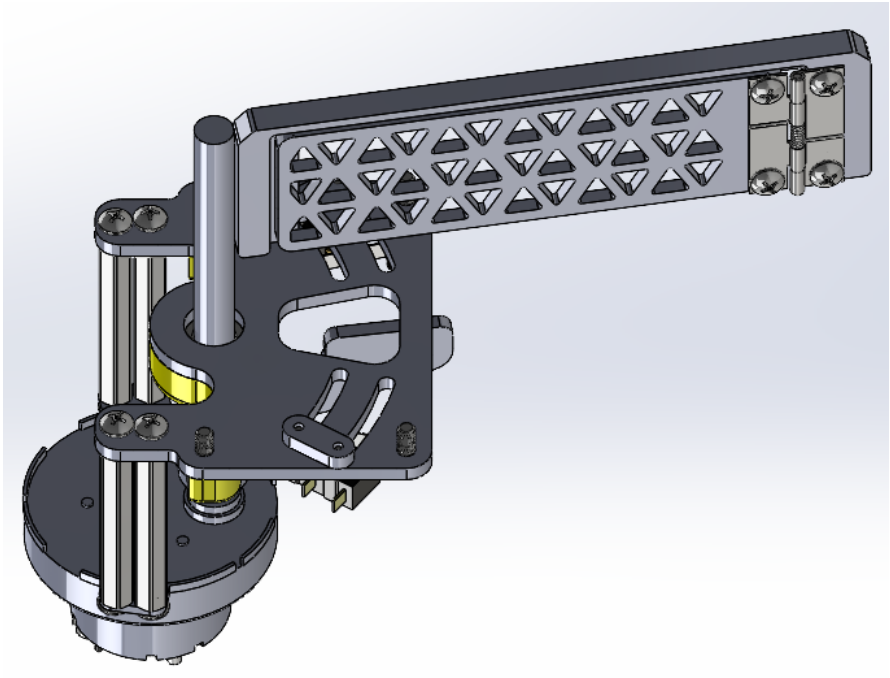

Fig. 2.5.6. Gate diverter prototype v3

After the gate diverter's construction, a significant level of switch bouncing was observed when the mechanism was connected to 5 volts. To solve this issue, a pin from the microcontroller was dedicated to controlling the voltage using pulse width modulation in an open loop system. This allows the motor to slow down after a predetermined amount of time as it approaches the limit switch to prevent bouncing.

Future Work:

For future development, an additional diverter gate will be added to the hairpin turn ramp on the left-hand side of the playfield to determine in which direction the ball would fall should it travel down the ramp. The main design changes that would be necessary require the gate to account for the angle of the ramp and the shaft length to account for the additional distance needed.

2.6 Steam Tunnel Trap Door

Introduction:

The steam tunnel trap door mechanism serves as an entrance to a wire form ramp (representing the UVA steam tunnels) below the upper and lower playfields. The goal of the mechanism was to have a door flush with a circular hole in the upper playfield that would normally be rigid until certain criteria are met during play. Then, the door would latch open with the added force of the pinball and the ball would be directed underneath the upper playfield to the lower playfield via the wire form ramp.

Design:

An important goal for the design of the trap door assembly was to be as simplistic and lightweight as possible. Three major design iterations took place. The first consisted of a circular 3D printed manhole mounted directly to a spring-loaded toggle bolt acting as hinge and relied on a doorstop attached to the tip of a horizontally mounted electronic linear actuator to slide back and forth to lock and unlock the trapdoor. The horizontal motion of the linear actuator was guided by a linear guide rail.

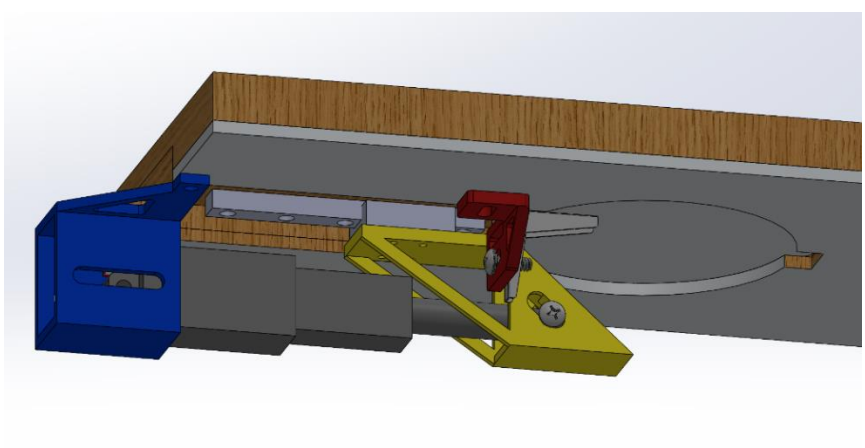

Fig. 2.6.1. Horizontal trapdoor assembly

Advantages to this design included an ease of locking and unlocking the door as the combination of the linear actuator and the linear guide rail allowed for smooth actuation back and forth. Another advantage to this design was that there was little material needed to mount the actuator to the playfield. However, the cons outweighed the pros for this design. Major disadvantages included the off centered toggle bolt (which was necessary to leave room for the actuated doorstop) which resulted in the door hinging asymmetrically and at an angle as well as a lack of room for the assembly to fit around other mechanisms in the upper playfield. Because of this the design was shifted to a vertically mounted sliding door stop.

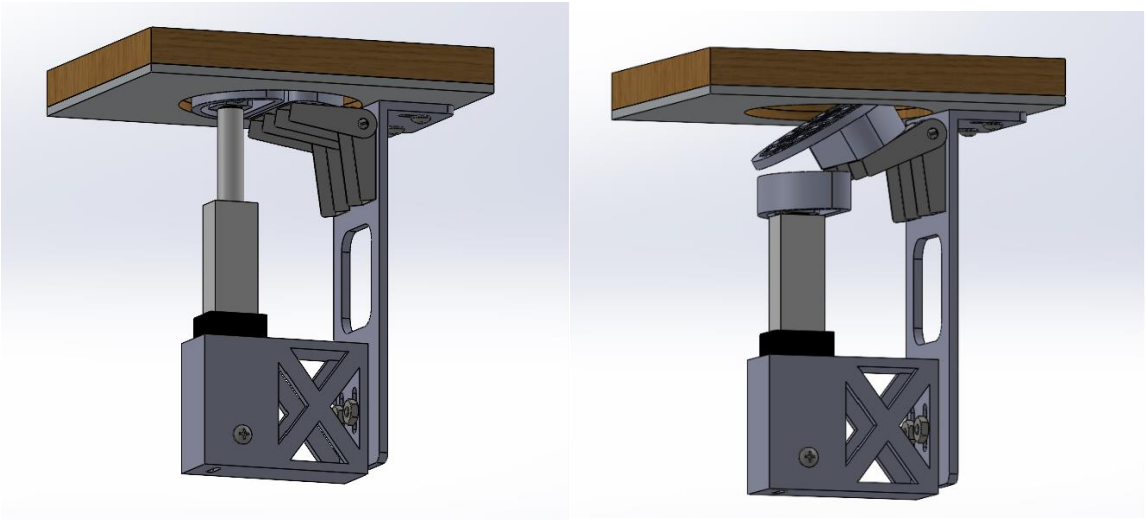

Fig. 2.6.2. Vertical trapdoor assembly with door opened and closed

The second design iteration was the first attempt at a vertically mounted design. This design used the same general idea of having a sliding doorstop to lock and unlock the trapdoor, however it was mounted vertically. Because of this a larger mount was needed, giving this design a larger footprint than the first iteration. However, the second iteration of the trapdoor did not interfere with other mechanisms mounted to the upper playfield unlike the first design.

Another feature of this design was the incorporation of two heftier toggle bolts since it was found after prototyping the first design that the original toggle bolt was too weak for continuous use on the pinball machine. The vertical design was prototyped with 3D printed ABS plastic and laser cut acrylic parts.

Fig. 2.6.3. First prototype of the vertical trapdoor design

After prototyping and testing the design incorporating the vertically mounted linear actuator it was found that two of the larger toggle bolts were too strong for the added force of the pinball to open the trapdoor. Also, the doorstop attached to the tip of the linear actuator tip was too large because it interfered with the spacer between the manhole and the top of the toggle bolts when it was moved upwards. Nevertheless, this prototype was sufficient to prove the concept of the vertical design, so improvements were made resulting in the third and final iteration.

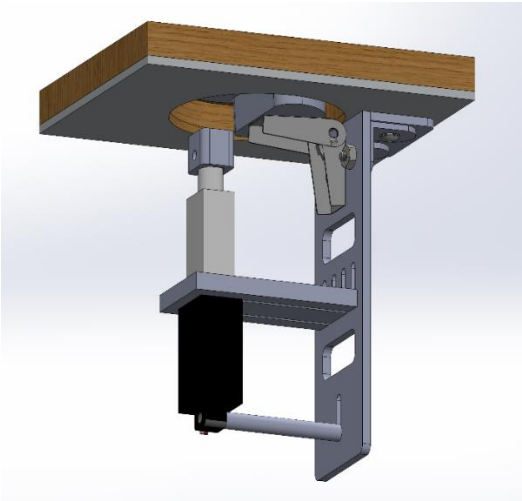

Fig. 2.6.4. Improved vertical trapdoor assembly

Improvements were made between the second and third iteration including the use of a single toggle bolt mounted centrally to the manhole. Also, the linear actuator mount was simplified and updated to improve ease of assembly and allow for fabrication out of aluminum. The bracket that attaches the manhole, toggle bolt, linear, and actuator together to was also updated to allow for fabrication out of aluminum. These updates resulted in a fully functioning and lightweight trapdoor mechanism that can be locked and unlocked by controlling the linear actuator.

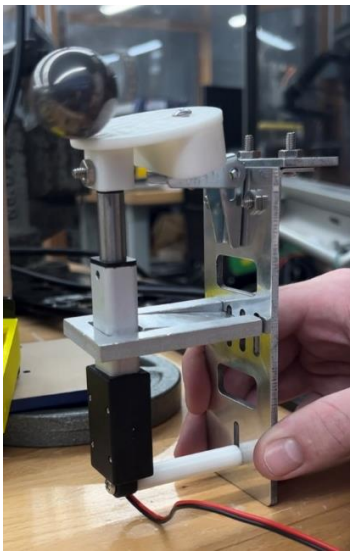

Fig. 2.6.5. Testing of the final trapdoor assembly

Future Work:

Future work for the trapdoor includes CNC machining a special sized hole in the upper playfield to fit the 2-inch diameter manhole, ensuring that the bracket will mount correctly to the playfield, adding a design feature that limits the toggle bolt from hinging above the playfield, and either casting or CNC machining the currently plastic manhole.

2.7 Bollard Post

Introduction:

The bollard post component in the UVA Pinball Machine is a mechanism that can raise and lower a metal cylinder in and out of the playfield. The application of the bollard post is to provide a physical obstacle that prevents a pinball from moving into a certain space. For example, there may be moments during the game where the player must temporarily pause to look at a prompt on the screens located near the scoreboard. It is difficult for a player to maintain attention to the prompt on the screen and continue playing pinball, so the bollard post can physically block the out-lane to prevent a pinball from exiting out of play. Furthermore, the

bollard post is designed such that its retracted state is completely flush with the playfield. This ensures that the pinball rolls over the bollard post without encountering a bump that would inhibit smooth gameplay.

Fig. 2.7.1. Bollard posts located at Culbreth Parking Garage at UVA

The bollard post was modeled after posts found around Grounds at the University of Virginia. Like their design in real life, the bollard post in the pinball machine was designed to restrict movement of a certain object. The difference in the design, however, is that the bollard post in the pinball machine can extend and retract from its enclosure. The bollard post had 9 iterations, each adding critical improvements.

First Iteration

The bollard post had 9 iterations, each adding critical improvements. Bollard Post v1 utilized the standard 1.2-inch linear actuator used throughout the entire pinball machine to move a metal cylinder up and down within the playfield.

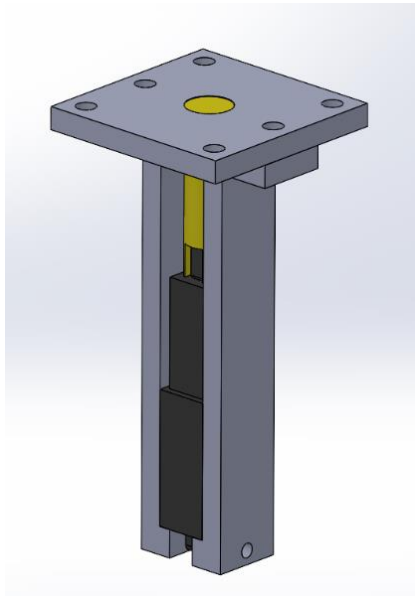

Fig. 2.7.2. Isometric view of bollard post v1

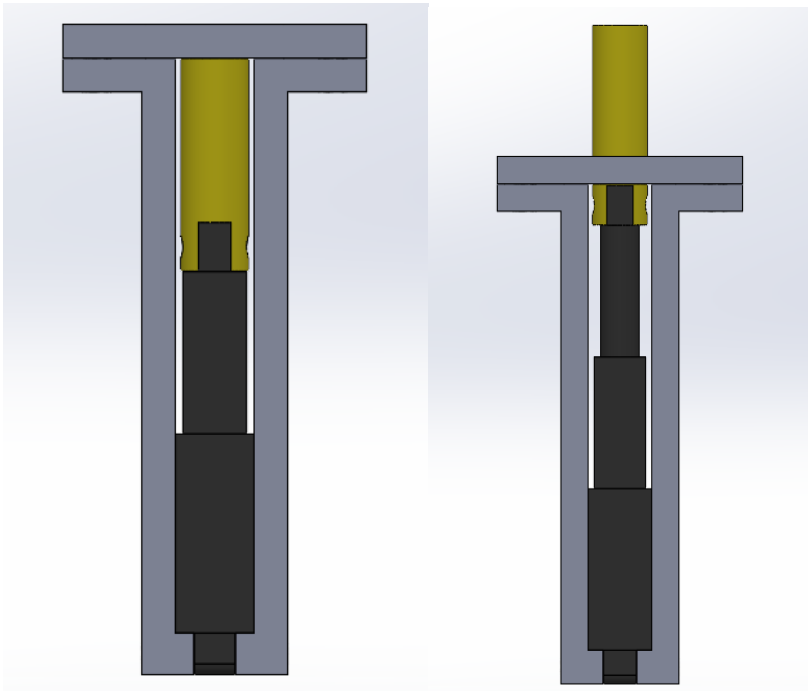

Fig. 2.7.3. Front view of bollard post v1, retracted state (left) and extended state (right)

This first iteration considers the main parts of the bollard post: connecting an actuator to a post and designing the post such that it can move up and down. However, to create a robust design capable of withstanding being hit by a pinball and able to be actuated many times without failure of the mechanism, the first version requires design improvements.

Second Iteration

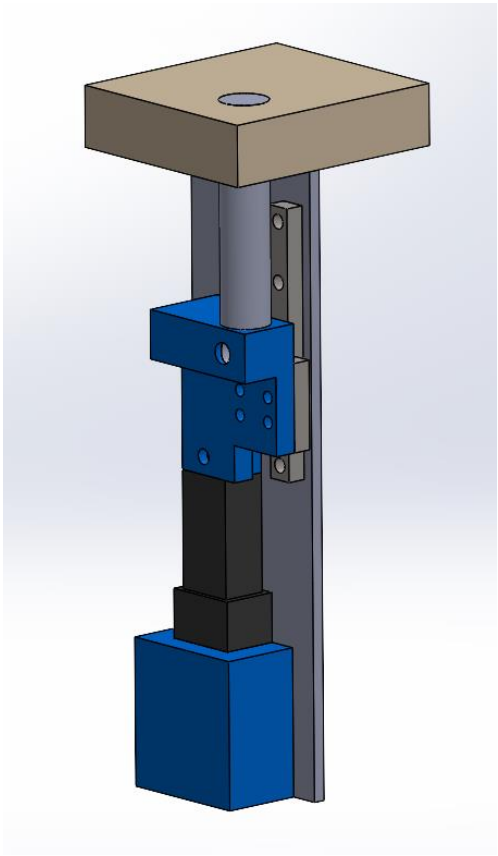

Fig. 2.7.4. Isometric view of bollard post v2

Bollard Post v2 implements a linear guide rail to help guide the motion of the bollard post. By including the linear guide rail, shown in Figure 2.7.4 behind the upper blue part, the actuation of the motor will be restricted to a smooth up and down motion. Furthermore, v2 introduces 3D designed parts, shown in blue, to connect the linear actuator and linear guide rail to an aluminum backing plate. These 3D parts help in connecting multiple parts and ensure that the assembly is secure during operation.

Third, Fourth, and Fifth Iterations

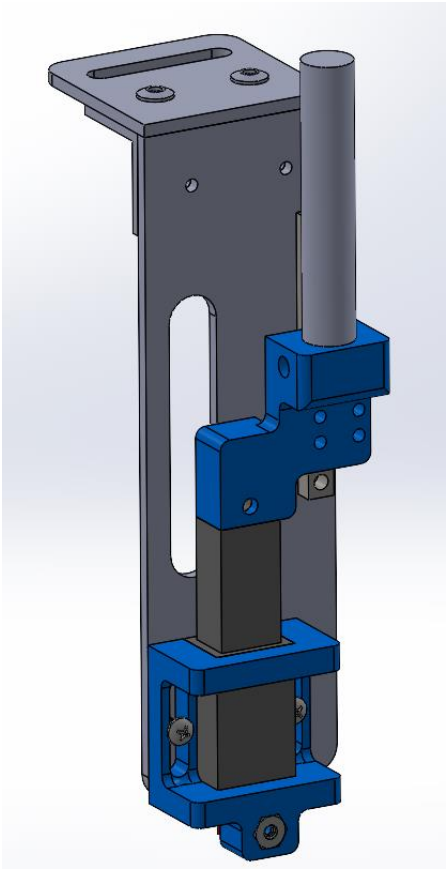

Fig. 2.7.5. Isometric view of bollard post v5

From version 2 to version 5 design optimizations in how the assembly is put together and weight are considered. During the iterations from v2 to v5, the importance of including all details of reality into the CAD assembly was stressed. For example, when mating the two aluminum plates, shown as the longer vertical plate and the shorter horizontal plate, an L-bracket and pop rivets were utilized to mate the pieces together. In the CAD assembly, the pop rivets were modeled, seen towards the top horizontal place as circular humps, tapped holes were included, exact screws from the MacMaster catalog were added, and the 3D printed parts were modeled after dimensions taken using calipers. It became clear throughout the design process that as more details were accounted for in the CAD assembly, conflicts could be taken care of in advance. For

example, as the bollard post move to being mounted onto the playfield, the implementation of the pop rivets helped to highlight the possible physical conflict that the bollard post would have a pivot point located at the pop rivets since the assembly would not be able to sit flush against the playfield.

Seventh Iteration

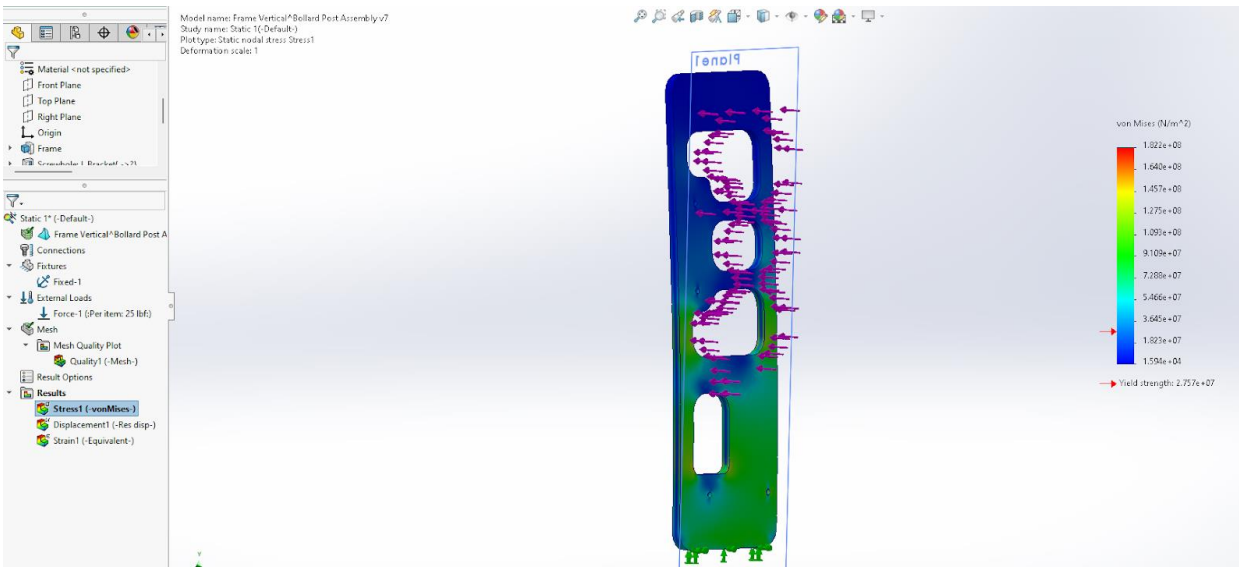

Fig. 2.7.6. Bollard post v7 aluminum backing plate in an FEA study

As the design continued to be iterated weight was considered, as removing the amount of material on the assembly while maintaining an adequate level of strength helps to create a robust design. Seen in Figure 2.7.6, an FEA study was conducted on the proposed aluminum backing plate for Bollard Post v7 to see in advance if the material cutouts harmed the plate's structural integrity. Furthermore, it is important to note that while the FEA analysis provides mathematical insight into the plate's structural integrity, it is a simplification of all the forces and modes of failure that are possible and should not be taken as the final determinant of a part's integrity.

Eighth Iteration

In the design's 8th iteration, the top horizontal plate was redesigned to be more centered relative to the rest of the mechanism. It also included a slot in the top horizontal plate to reduce weight.

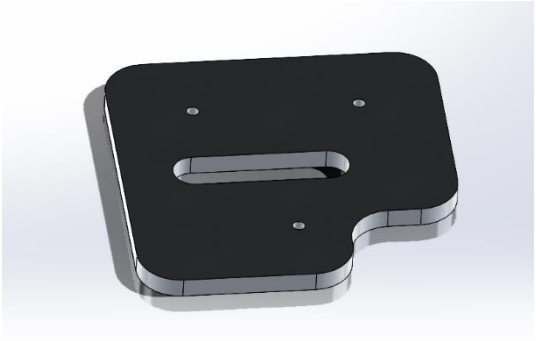

Fig. 2.7.7. Top horizontal plate of bollard post v8

The entire mechanism was then printed or waterjetted, depending on the part.

Ninth Iteration

In the design's 9th and final iteration, the slot from the top horizontal plate was filled back in because of concerns with bending of the piece. 3 screw holes were also added into the top horizontal plate to provide a way to mount the entire assembly to the playfield.

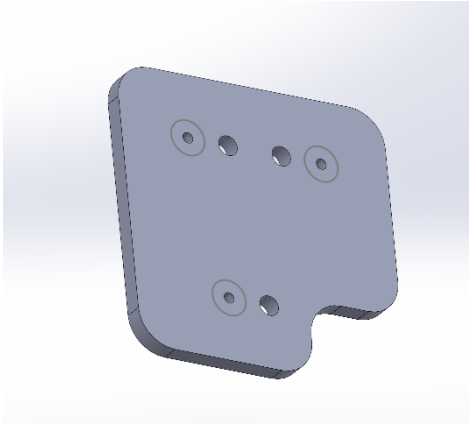

Fig. 2.7.8. Top horizontal plate of bollard post v9

The new top horizontal plate was then waterjetted. The entire assembly was then put together, including pop riveting the top horizontal plate to the L bracket and drilling screw holes through both the top horizontal plate and the L bracket using the pilot holes. All the edges in the assembly were smoothened out to make the mechanism safer to handle. Finally, the entire mechanism was mounted into the playfield and tested using a 5V battery. The mechanism worked without issue.

Fig. 2.7.9. Bollard post v9 assembled

Fig. 2.7.10. Final bollard post prototype screwed into playfield

Future Work:

The mechanism needs to be tested using a higher voltage power supply and mounted into the final playfield.

2.8 Cavman Spinning Target

Introduction:

In pinball, spinners are commonly used in pinball games to add points to the player's score. This spinner is modeled after the cavman logo, representing UVA's athletic teams. With the desired design in mind, the goal is to have most of the weight as far away from the axis of rotation as possible and have the center of mass below the axis of rotation so that the spinner always settled in the right orientation. As for counting spins for keeping track of points, a hall-effect sensor can be employed to count the number of rotations a wheel on the end of the axis.

Design:

First, the model of the cavman logo was brought into three dimensions. The features of the cavman were expressed by extruding shapes out from the base outline of the logo.

Fig. 2.8.1. Cavman logo, front, and angled views in SolidWorks (left to right)

The sizing of the above spinner was meant to fit the original holes in the ramp from the previous group. However, this size proved to be much too small relative to the ramp and the rest of the game so new slots would be machined into the ramp with inserts to house the bearings and the spinner. In the first iteration of this concept, the inserts were intended to be machined via vertical mill. The first sand-cast of the spinner was also made from pewter.

Fig. 2.8.2. First cast of Cavman spinner

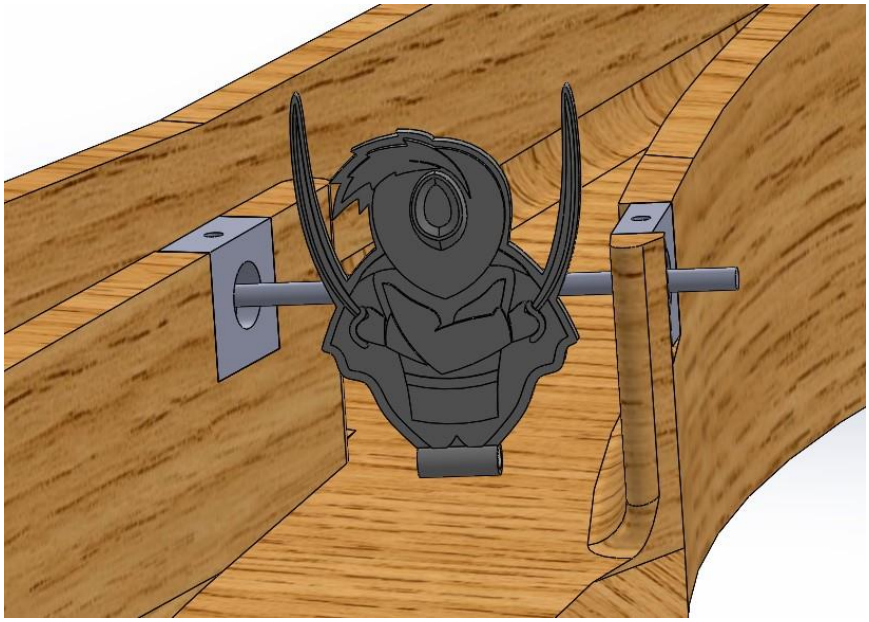

Fig. 2.8.3. First iteration of metal inserts in left-ramp

However, since the machined inserts would break up the curve of the ramp, vacuum casting the inserts would be preferable. Thus, the inserts could conform to the curves of the ramp. The mounting of the hall-effect sensor was also worked out to fit inside one of the ramp inserts with enough clearance to avoid obstructing the pinball beneath it. There would be a machined wheel with mounted magnets to trigger the sensor and indicate that the spinner is activated. Modifications were also made to the spinner so that it is more bottom-heavy and removed some mass in the axis hole.

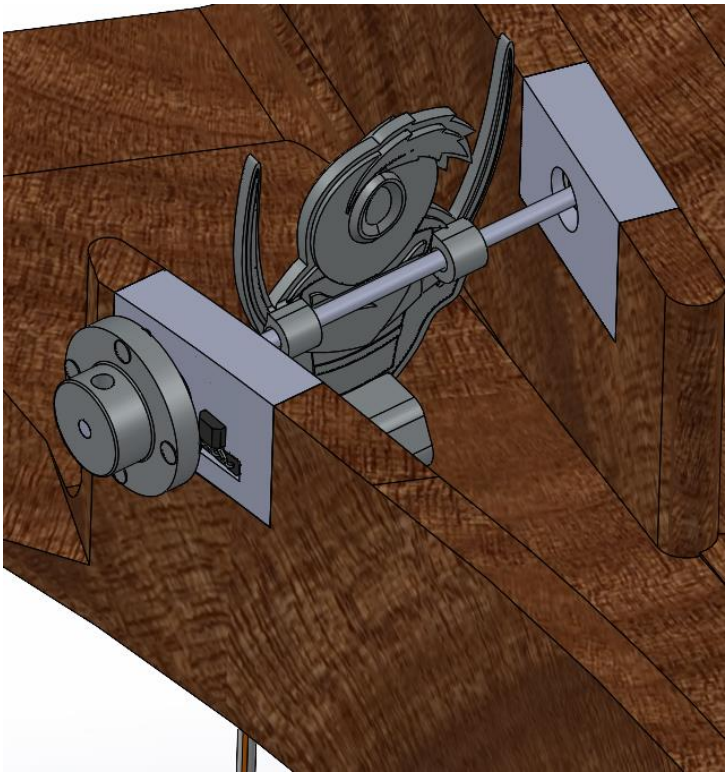

Fig. 2.8.4. Second iteration of metal inserts in left-ramp with hall-effect sensor and wheel

Fig. 2.8.5. Final sand-casted version of the Cavman spinner with tungsten weight

Next, the ramp inserts were 3D printed, doubling as a proof of concept of the hall-effect sensor registering spins and marking the spots on the physical ramp that needed to be removed.

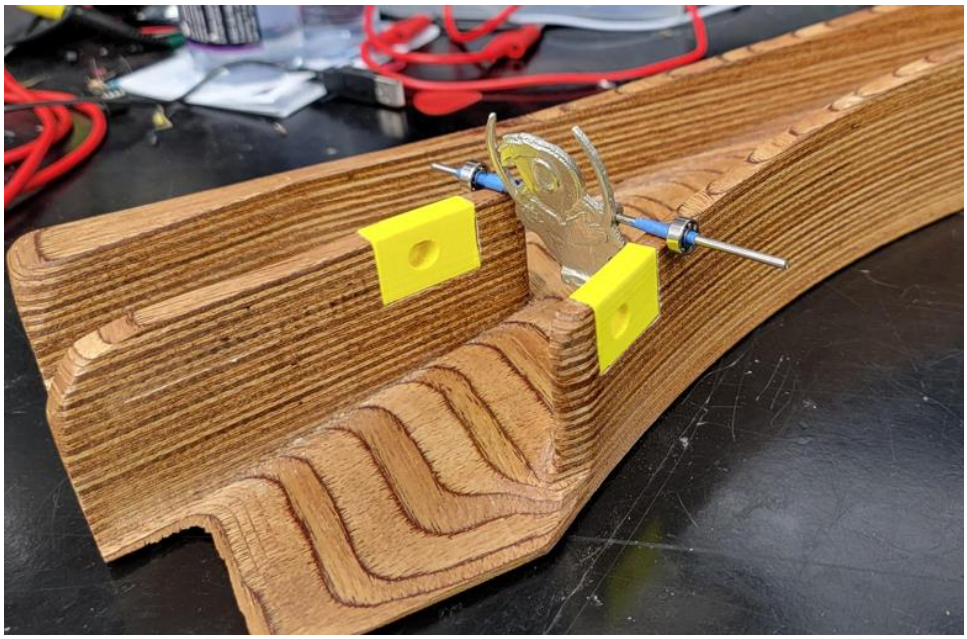

Fig. 2.8.6. Ramp cutout with 3D printed inserts

Future Work:

As it stands, there are only a few things to be finished for the Cavman-inspired spinner. The metal inserts need to be cast out of metal and tapped for mounting so ensure durability and be able to be taken apart. Holes need to be drilled into the ramp for both wires from the hall-effect sensor and the through-holes for mounting the metal inserts with screws beneath the playfield. Aside from that, the only work left would be the coding involved in counting the spins and adding it to the total score.

2.9 Rotating Birdman Statue

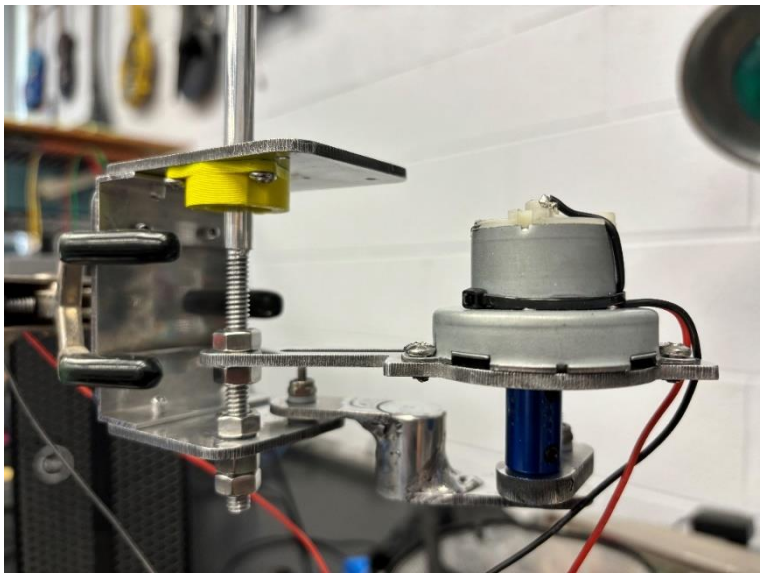

Fig. 2.9.1. Close-up view of mechanism

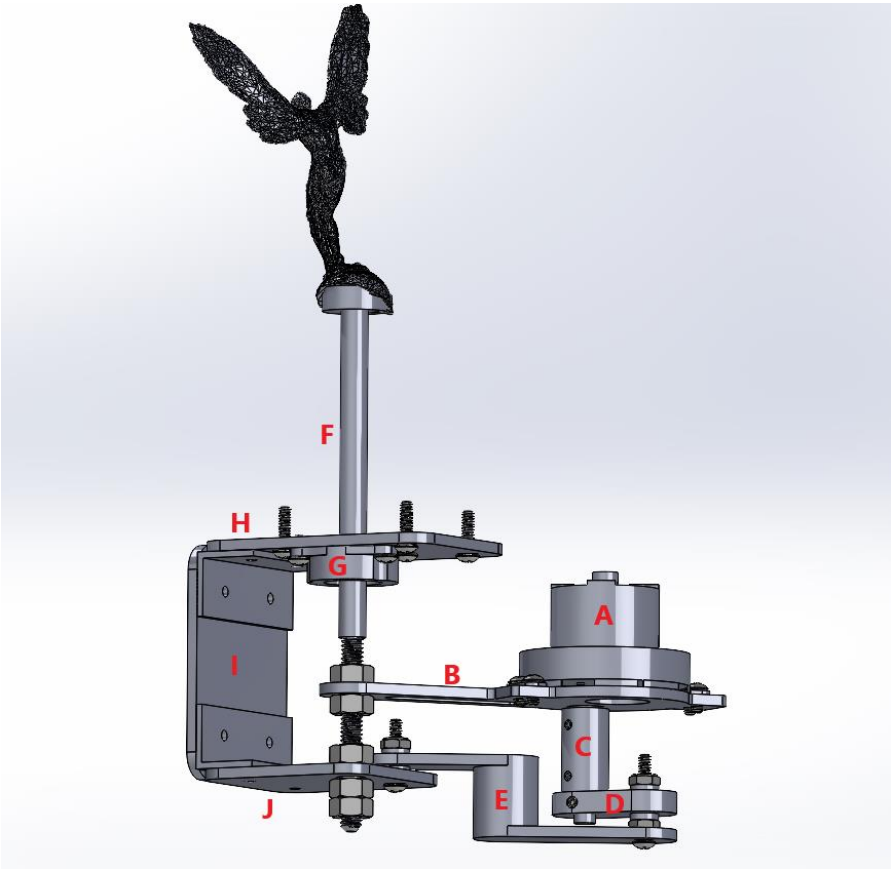

Fig. 2.9.2. Labelled SolidWorks model

Introduction:

"The Aviator," colloquially termed, "Birdman," is a statue that currently stands near the entrance of Clemons Library at UVA. It is a tribute to James Rogers McConnell, a former UVA student who volunteered to fight the Germans in WWI prior to American involvement. He was shot down in a dogfight over France in 1917, making him the last American pilot killed in the conflict before the U.S. entered the war (Kelly 2017). This mechanism displays a miniature Birdman statue atop the playfield, rotating it back and forth in a 120° oscillating motion.

Design:

To minimize the need for software and microcontroller pin use, this mechanism converts the constant rotation of a small motor to swiveling motion with a four-bar linkage, modeled after an oscillating fan.

The motor used (A, Fig. 2.9.2) is a 12V DC motor designed for a microwave turntable. It may be run at a lower voltage depending on the desired speed. It is fastened to the first arm of the linkage (B, Fig. 2.9.2) with four screws. Rotation is translated through the attachment tube (C, Fig. 2.9.2) which is fixed to the middle drive bar (D, Fig. 2.9.2) by a pin held in place by set screws. This drive bar spins, causing the third arm of the linkage (E, Fig. 2.9.2) to swing back and forth. This third arm rotates about a screw which acts as a pin. The first arm (B, Fig. 2.9.2) is secured to the pedestal rod (F, Fig. 2.9.2) by two nuts. This rod extends up through a bearing (G, Fig. 2.9.2) then through the playfield and is intended to screw into the bottom of the mini-Birdman statue model. As the first arm sways back and forth, the pedestal rod rotates back and forth, too. This is what causes the statue to wave.

All screws, nuts, and set screws use #6-32 threading, except for the pedestal rod (G, Fig. 2.9.2) and its five nuts, which use ¼”-20 threading. PTFE washers were used to decrease friction at several joints that required smooth rotation. Four PTFE washers fit onto #6-32 screws; four fit onto the ¼”-20 sized pedestal rod. The device is housed in a C-shaped frame (H, I, and J; Fig. 2.9.2) which was then mounted to the playfield by five screws.

Manufacturing

Fully flat parts were cut from ⅛” or ¼” thick 6061 aluminum stock with the University’s waterjet located in Lacy Hall. A 0.75” diameter tube was welded between two pieces to create the multi-level third arm (E, Fig. 2.9.2). All holes were drilled with a drill press or hand drill and then hand-tapped if threading was necessary. The pedestal rod (F, Fig. 2.9.2) was cut and down on a lathe and tapped using a ¼”-20 die. The frame was put together by riveting the plates to aluminum angle bars. The fixture that held the bearing was 3D printed.

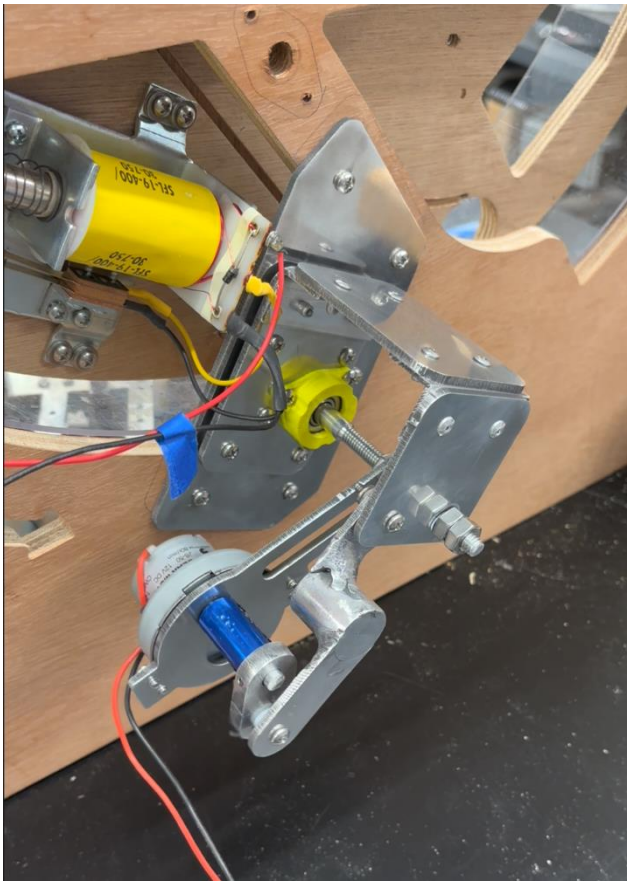

Fig. 2.9.3. Birdman mechanism mounted on bottom of playfield

Future Work

Currently, the mechanism is entirely assembled (see Fig. 2.9.1) and mounted on the prototype playfield (see Fig. 2.9.3) except for the actual Birdman model and the semi sphere it stands on, which needs to be cast out of metal. An STL file of a scan of the Birdman statue is available in the UVA Box folder. Threads will need to be tapped into this so that it may be screwed onto the pedestal rod. The pedestal rod is extra-long and will need to be cut down to size and threads tapped on the end once the necessary length is determined.

2.10 RGB LED Scoreboard

Introduction:

The LED Scoreboard is a seven-segment LED digit scoreboard that keeps track of the player's current score. The scoreboard has five digits and a decimal place after the third digit, making the maximum score 999.99. The score represents the number of credit hours the player has.

Acrylic Digits:

The face of the scoreboard is acrylic. This material offers a clean and shiny appearance. Additionally, light from the LEDs can diffuse easily through ⅛" thick white acrylic. A ¼" thick black acrylic sheet was laser cut for the scoreboard, and ⅛" thick white acrylic was cut for the seven-segment digits. When laser cutting the digits, we noticed that they were slightly too small to press fit into our black cutout. This is because the laser destroyed some material close to the cuts. To counter this, we modeled the digit cuts to be slightly larger by transforming the x and y dimensions by 100.5 to 102.0%. Our prototype single digit (Fig. 2.10.1.) is shown below.

Fig. 2.10.1. Single acrylic digit prototype

Frame Design:

For each digit there are seven addressable LED strips. Additionally, there is a circular LED placed after the third digit for the decimal place. The scoreboard frame was designed to accommodate all 36 LEDs. As shown in [Figure 2.10.2], there are several rectangular cutouts surrounding the pin ends of the LED strips. This serves two purposes: making the frame more lightweight and making space for wiring. If the pins or wires were to touch the metallic frame, the circuit may short.

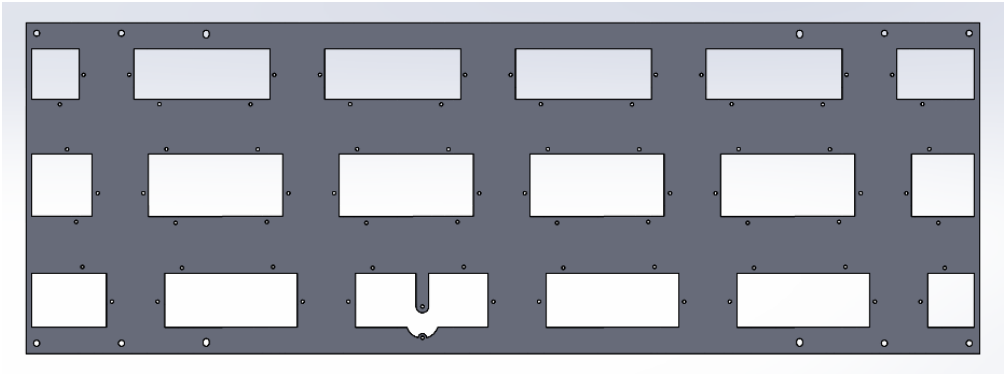

Fig. 2.10.2. Aluminum frame CAD model

The chosen material for the frame was 6061 aluminum, as this alloy is lightweight and strong. We ordered a 12x24”, ⅛” thick 6061 sheet and cut the frame out via waterjet. Each LED is mounted using two ¼” 4-40 screws. For 36 LEDs, there are 72 holes that need to be tapped for 4-40 screws. Since waterjet cuts are rough, we cut 0.75” pilot holes then hand drilled and tapped each hole. The holes for mounting were all through holes, so no further action was needed.

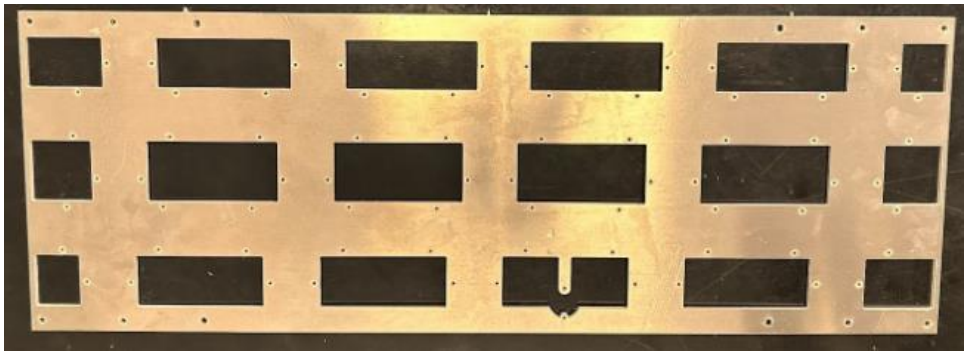

Fig. 2.10.3. Aluminum frame

Wiring and Code:

In the design of the LED scoreboard, a critical challenge was managing the complexity of addressing 280 individual LEDs. This challenge stemmed from the scoreboard's configuration, which comprised five digits, each digit consisting of seven 8x1 addressable LED strips. The total setup included thirty-five strips, bringing the LED count to 280. To efficiently manage this complexity, a daisy chain configuration was employed for both wiring and control purposes.

The daisy chain approach was instrumental in simplifying the coding and wiring processes. In this configuration, each LED strip was connected sequentially: the output of one strip fed directly into the input of the next. This method created a continuous chain across all five digits, streamlining the control mechanism. The primary advantage of this setup was the reduction in complexity, as a single data line could transmit control signals sequentially to each LED. This arrangement simplified the programming and enhanced the stability and responsiveness of the display.

Electrically, the LED strips were wired in parallel, with a 5-volt power supply ensuring consistent voltage across all units. The choice of a 5-volt supply, in theory, would have struck a balance between providing adequate brightness for the LEDs and maintaining energy efficiency, an essential factor in sustainable electronic design.

The parallel wiring and daisy chain configuration also brought about significant benefits in terms of scalability and maintainability. This design allowed for easier modifications to the display, such as adding or rearranging digits, without extensive re-wiring or alterations in the software. It also provided an easier way of coding light shows and digit displays, since a graphic could be made to showcase every single LED address, and which number it belonged to.

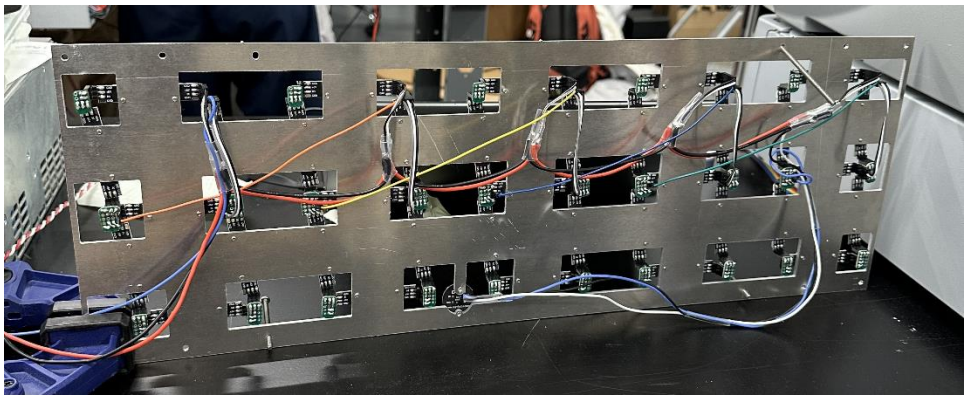

Fig. 2.10.4. Addressable LED strip wiring configuration

The integration of a daisy chain configuration with parallel wiring and a carefully selected power supply resulted in a system that was both efficient and adaptable. Unfortunately, an issue was encountered where the voltage predominantly channeled to the first digit, leading to a voltage drop in LEDs positioned beyond the 64th address, thereby causing insufficient voltage supply to the latter segments of the chain. This was fixed, but the initial prototype had to be tampered with to avoid extensive damage.

Mounting and Assembly:

The acrylic cut needed to be attached to the aluminum frame with the LEDs. ¼" acrylic spacers were placed in between at each of the four corners to allow for space for the LEDs. The holes in the corners of the acrylic cut were tapped for 6-32 screws. This allowed for the screws to be inserted backwards and not have the screwheads visible on the frontside of the scoreboard. The scoreboard was to be mounted at 10 degrees. To do this, 6061 aluminum spacers were cut with the bandsaw at 10-degree angles. The scoreboard was then mounted using screws through these spacers and into t-nuts installed in the wooden backboard.

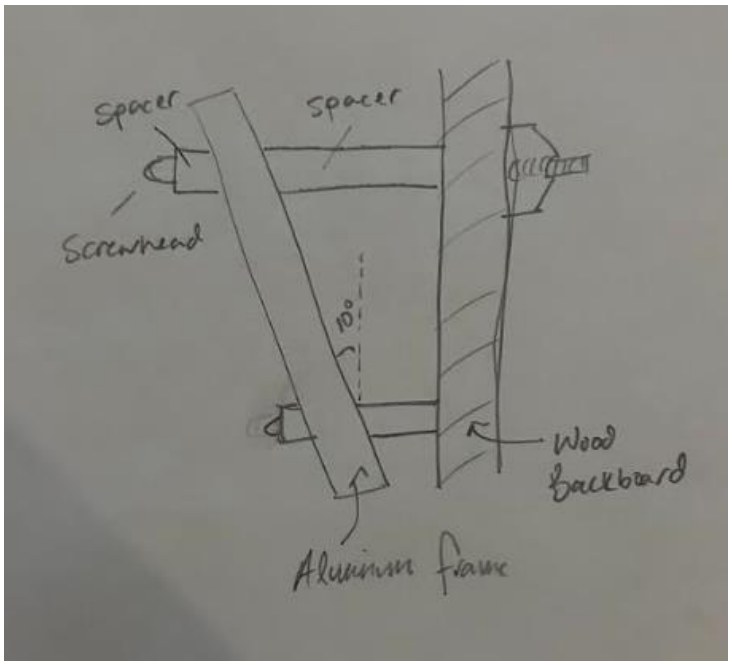

Fig. 2.10.5. Spacer drawing

The complete scoreboard assembly is shown below.

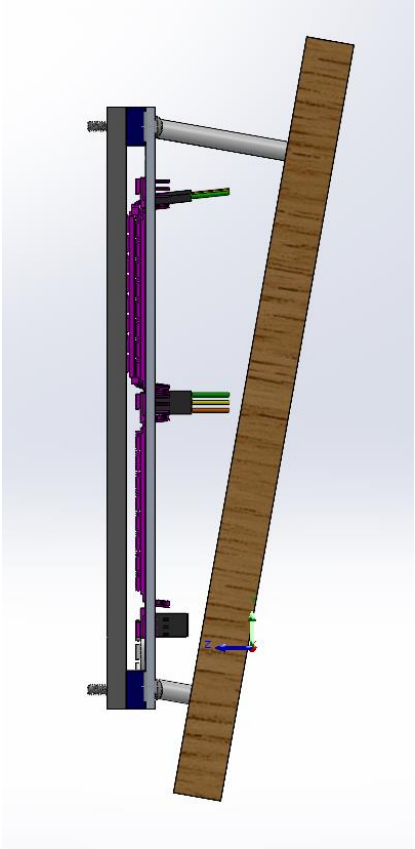

Fig. 2.10.6. LED mount assembly

Future Work:

When assembling the scoreboard, we noticed that the holes to attach the acrylic cut to the aluminum backboard were not aligned. This is due to the acrylic slightly expanding due to heat from the laser cutter. In the future, more research should be done on this thermal expansion. The LEDs were fully operational, as shown below.

Fig. 2.10.7. Complete LED Backlit Acrylic

2.11 Ball Return and Ball Launch

Introduction:

One of the most iconic and necessary elements of Pinball is the spring-powered plunger that launches the ball into play. However, because this takes up a couple of inches inside of the machine, the playfield is offset to the side a bit and is no longer symmetric. The group that initially attempted the UVA-themed Pinball Capstone project in 2016 decided to rectify this and make a symmetric playfield. This meant that a ball launch mechanism would need to be implemented creatively.

To collect the balls and carry them back to the launcher, ready to be sent back into the game, a ball return is needed. On our machine, we intended to have the ball return to either the left or right side. On the right is the player-controlled launch mechanism. On the left, an

automatic launcher controlled by the game would act as an “extra life” in the game by giving the player a second chance for a ball that would otherwise go down the gutter and out of play.

Design:

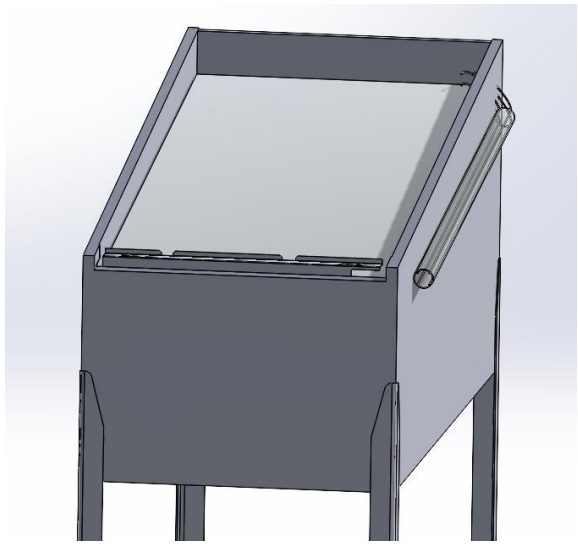

Fig. 2.11.1. External ball delivery concept

Fig. 2.11.2. Internal launcher concept

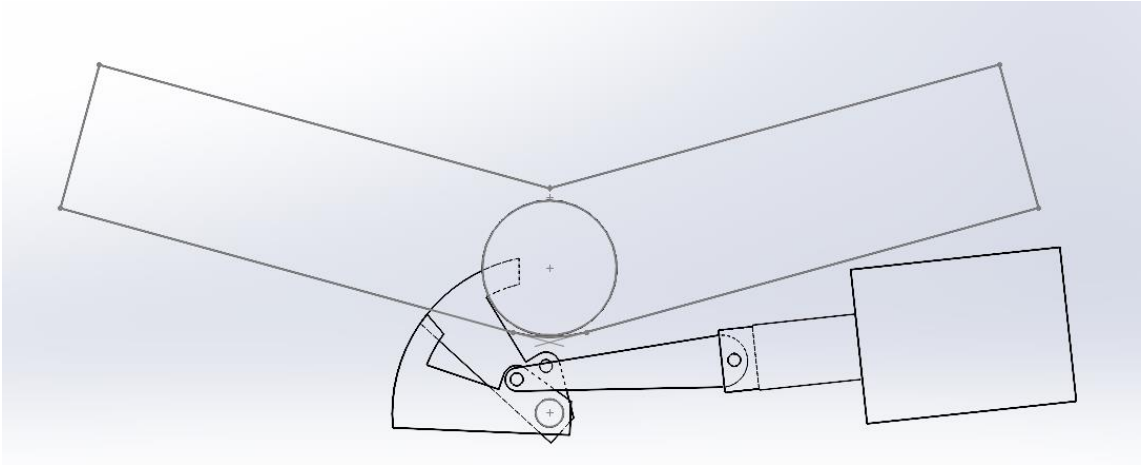

Fig. 2.11.3 Sketch of ball return mechanism

Initially, we explored the idea of an external ball launcher, which would be mounted to the side of the outside of the cabinet. We would use a clear plastic tube and the ball would roll along a rail inside the tube (to avoid scratching, provide better control, and make manufacturing more feasible). A visualization of this concept is shown in Figure 2.11.1. It was determined that this would be too unconventional and fail aesthetically. Turning to an internal design, we intended to have the plunger against the inside of the right wall and use a small hump to redirect the ball to allow for skill shots (see Fig. 2.11.2). Players could fire the ball quickly to make it up the ramp and onto the upper playfield or opt for a softer shot to take control with the lower flippers. There was also an option for a “ball save” system. The ball would launch initially through a one-way gate, which would redirect the ball to the return pit if it came from the other direction. This gate could be movable, like the diverter gate shown above, if the player activates some bonus, making the one-way gate move and allowing for the ball to fall back onto the launcher. This would let the player save the ball by relaunching it.

The ball return’s design was modeled off the Black Knight Pinball machine. Solenoids drive a hammer that smacks the ball up an incline. After the ball reaches the peak of the incline, gravity pulls it down a decline so that multiple balls may stack in a queue. Another solenoid

would activate a curved hammer that would pop the ball up and into the launcher chamber for the plunger to hit it. Figure 2.11.3. shows a sketch of what the first stage of this looks like. This mechanism would be doubled and mirrored on the other side so balls could be launched to the left and right. The first hammers would be offset vertically so that both could fit.

Future Work:

The ball launcher concept should be constructed. The plunger itself can be built from scratch, but a premade one is preferred. The housing for this could be built from wood; the redirection block would need to be made from a more resilient material like aluminum.

The ball return feature is not fully developed yet, and the next step would be to finish creating a SolidWorks model that shows both sides rather than just one. Spacing is delicate because there is very limited space at the bottom of the playfield.

Chapter 3: Feature Design (Solid Modeling)

3.1 Model Rotunda

Design:

The model of the Rotunda from the Pinball 1.0 group was saved and served as the basis for this model. There were a couple of things that needed to be changed for this project: The material, size, and mounting.

The original model was 3D printed out of ABS plastic. For this model, however, we wanted to cast the rotunda out of metal. With a metal ball bouncing around, the rotunda needs to withstand the forces of the ball hitting against it if it gets knocked up into the air. The original model was thick all around, and the top was completely solid. It had a total volume of 6.6 cubic inches. We planned to cast the rotunda out of pewter or aluminum. Pewter has a density of 0.27 lb/in^3. If the original design were cast out of pewter, it would weigh in at almost 2 lbs.

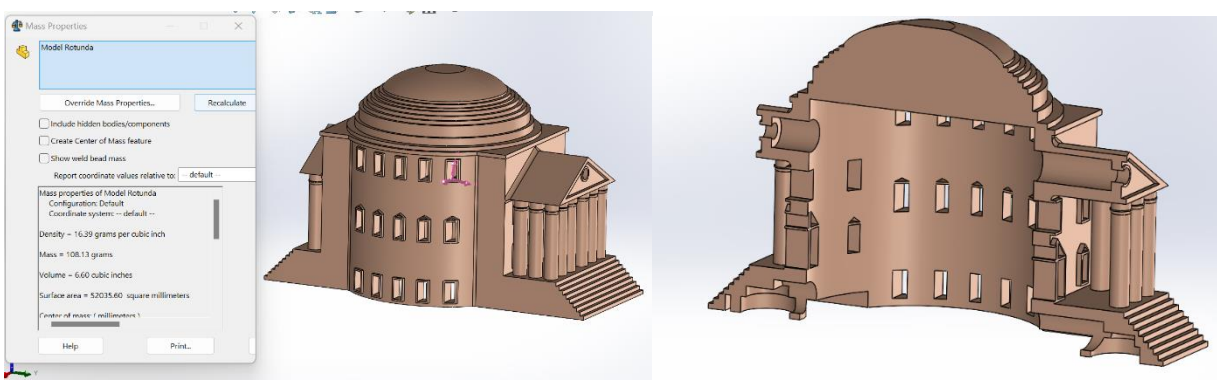

Fig. 3.1.1. Pinball 1.0 Rotunda model with material properties (left) and section view of their rotunda to highlight thickness and solid top (right)

The original model was hollowed out as much as possible to make the rotunda as light as possible. Along the outside, the thickness remains at about 0.1 inches to ensure the walls are not too thin and will dent if the ball knocks against it. The entire top was hollowed out and remains at a thickness of 0.1 inches. Walls that remain behind the rotunda columns are thinner than

0.1inches, and fillets were added throughout the model to strengthen certain areas, and chip away excess materials in certain areas. The final model has a volume of 3.38 cubic inches.

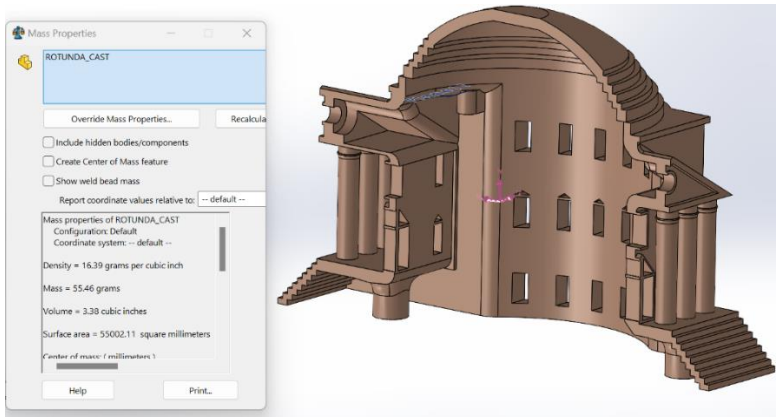

Fig. 3.1.2. Section view and mass properties of final Rotunda model

While the mass was being reduced, the internal mounting for the lights, and the rotunda to the base were developed in parallel. First of all, the rotunda dome was increased in size slightly to provide more room for the lighting control board and other lighting fixtures. Two extrusions were added at the top of the rotunda dome with holes so that the control board can be screwed into tapped holes. Two other screw holes, also tapped, were all added at the four corners at the top of the inside of the rotunda. There were not many iterations of this. The same basic design was kept the same, while some dimensions were tweaked slightly.

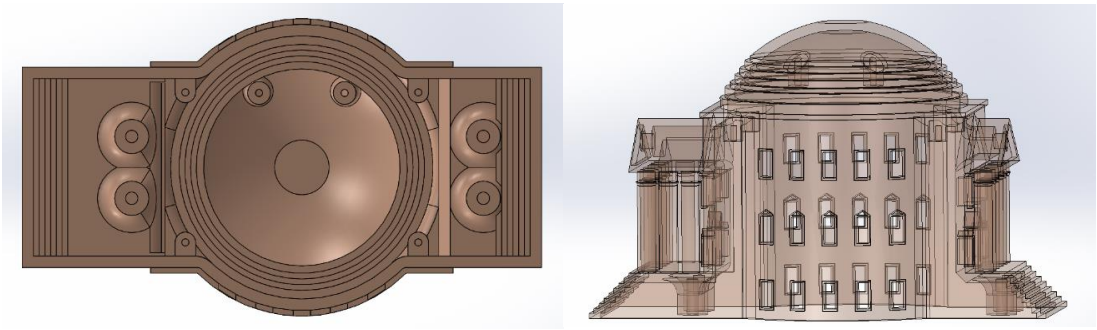

Fig. 3.1.3. View of added mounting from bottom of the Rotunda (left), and transparent rotunda to see the extrusions inside (right)

The Pinball 1.0 initially had a double post design for the rotating rotunda, but we opted to have a single post design instead, so it looks more like the Rotunda is floating up in the air. For

this, a cantilevered beam is to be placed underneath the Rotunda. Instead of having two slots to wedge the post in, the bottom mounting was changed to two tapped extrusions on each side, so the rotunda can be screwed into the cantilevered beam.

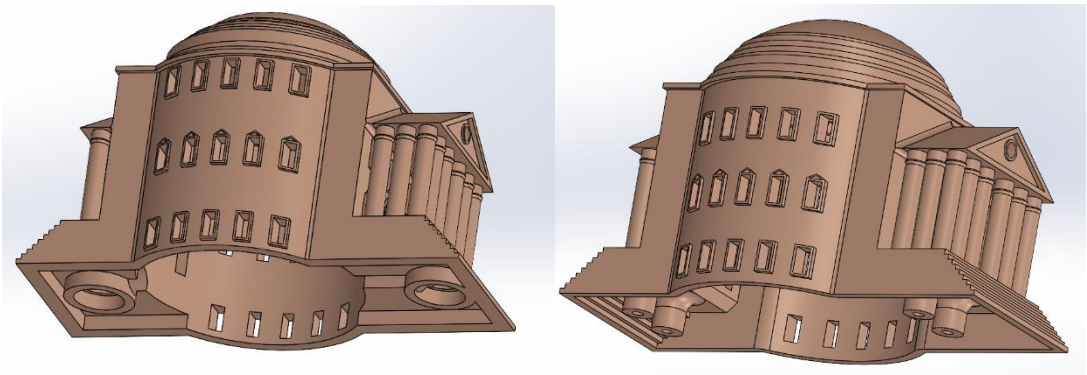

Fig. 3.1.4. Old Pinball 1.0 mounting (left) v. current mounting (right)

Future work:

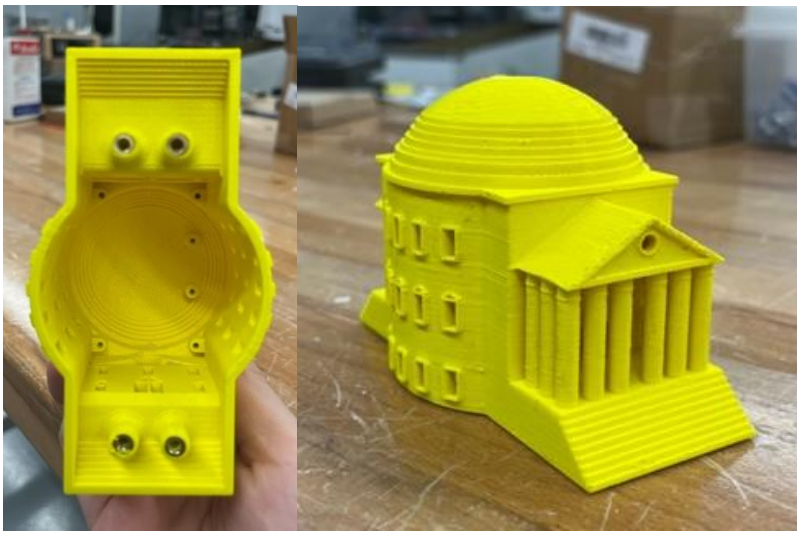

Fig. 3.1.5. Final rotunda model 3D printed to use as a place holder

For the future, there is not much design work that needs to be done for the rotunda. The next step is casting it out of metal. As mentioned before, pewter and aluminum were considered as casting metals. It was decided to try to cast the rotunda out of Aluminum because it is both

stronger and less dense, so it will come out lighter. The main problem with casting aluminum is that it has a much higher melting point at over 1,000 degrees Fahrenheit. With the assistance of professor Garner and his personal machine shop, many processes of the casting process have already been completed.

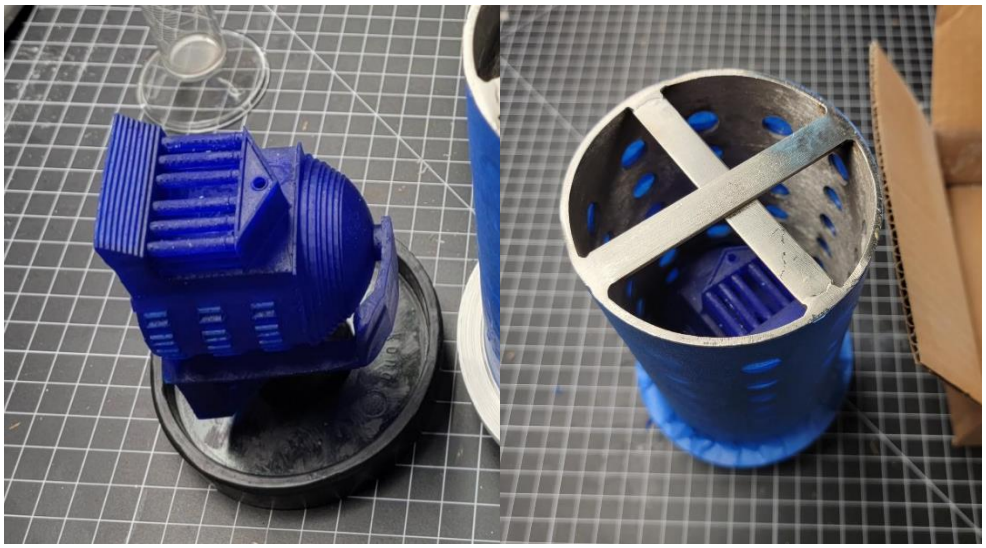

Fig. 3.1.6. Model of rotunda 3D printed out of wax (left) and model inside casting barrel (right)

The plaster has been added and placed in a vacuum tank to get rid of any air bubbles. The wax is then removed by being placed in a kiln and then melted away resulting in a rotunda shaped negative. Unfortunately, the barrel shown in Fig 3.1.5. is only about 4 inches in diameter, so when the aluminum is added there is a chance that the plaster will break, and the metal will burst out.

Fig. 3.1.6. Vacuum casting of wax model with plaster to create rotunda negative as a metal mold

3.2 Beta Bridge

Introduction:

The Beta Bridge component is a bridge that connects the upper left ramp to the upper playfield. Modeled after the Beta Bridge located at UVA, the design combined the recognizable features of the Beta Bridge and CAD software to create a smooth bridge that transitions between two critical parts of the playfield.

Fig. 3.2.1. Beta Bridge at UVA, wide view

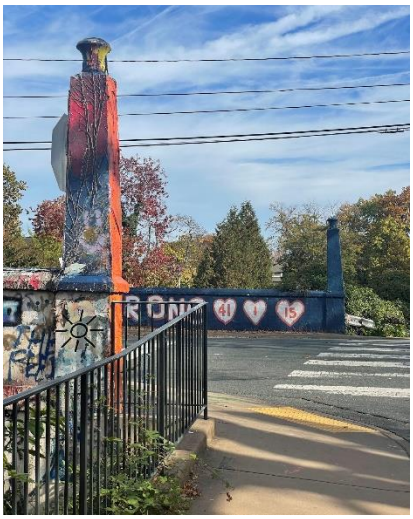

Fig. 3.2.2. Beta Bridge at UVA, column view

The key features of the Beta Bridge are its columns and its rails that span the entire bridge. To make the design recognizable, the rails and columns were modeled to resemble their real-life counterparts as closely as possible.

Model:

The Beta Bridge design was iterated 6 times, each iteration adding improvements to flush playfield mating and resemblance to the Beta Bridge at UVA.

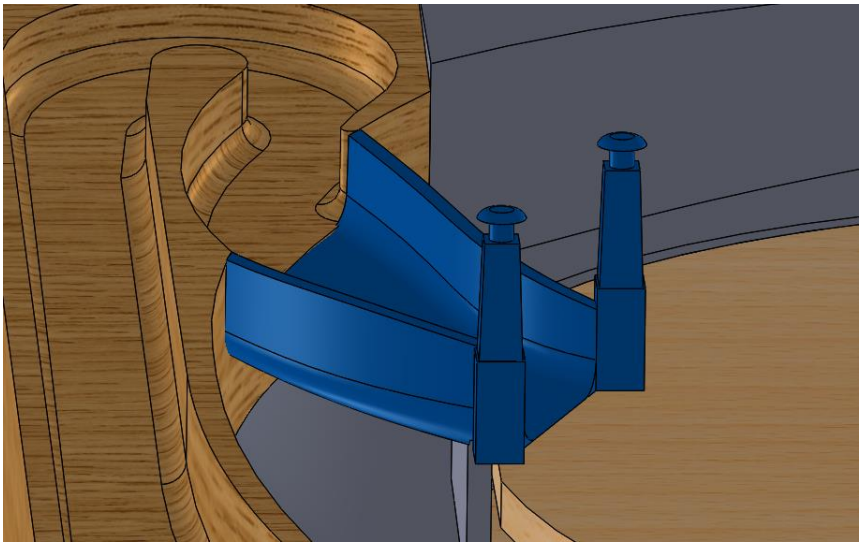

Fig. 3.2.3. Beta Bridge v1 connecting the upper left ramp and the upper playfield

The first design of the Beta Bridge successfully connects the upper left ramp and the upper playfield, ensuring a smooth transition such that the marble does not experience a bump in its path. Furthermore, the first attempt at columns was completed, including forms that replicate the forms seen on the Beta Bridge.

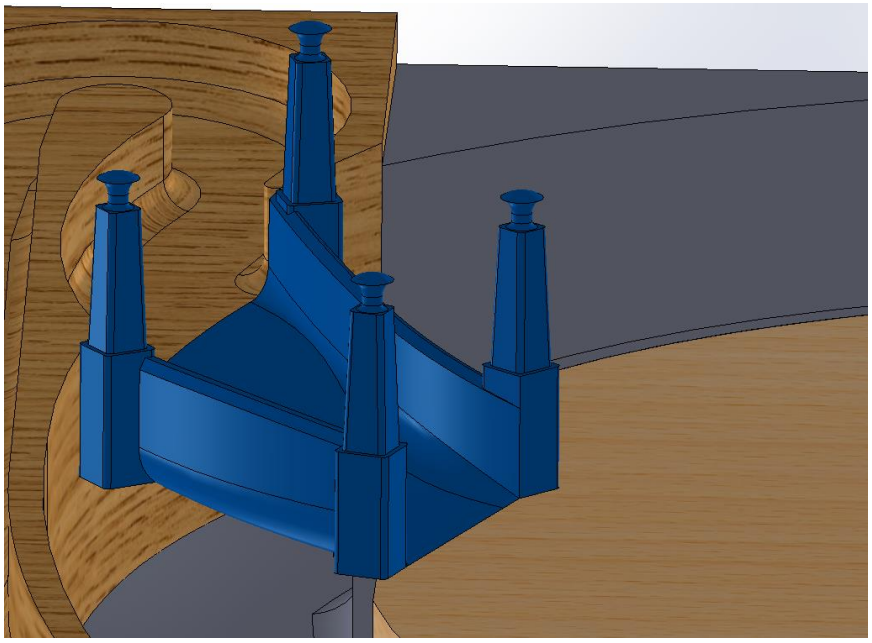

Fig. 3.2.4. Beta Bridge v3

The third version of the Beta Bridge improved the design by rotating the columns in the model such that they are in line with the rails of the bridge, adding fillets to edges, and chamfering the rails to resemble the rails on the Beta Bridge.

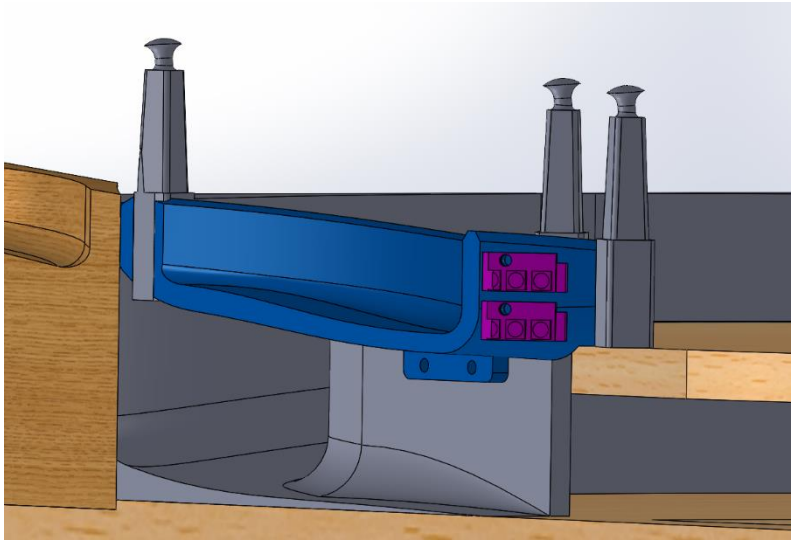

Fig. 3.2.5. Section view of Beta Bridge v5

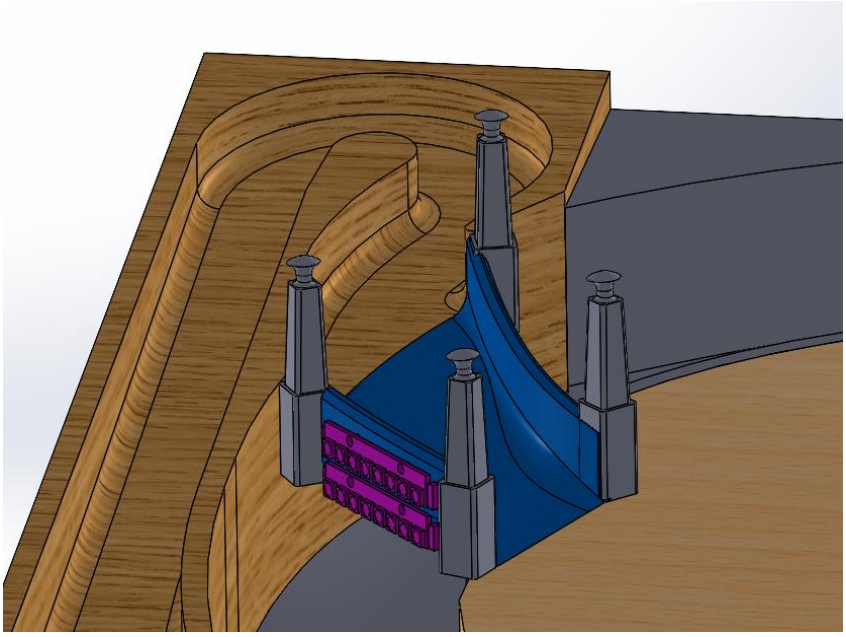

Fig. 3.2.6. Beta Bridge v5 located on the upper left ramp and upper playfield

The fifth version of the Beta Bridge implements two main additions: mounting holes for LED strips, shown in purple, and a mounting bracket, shown at the bottom of the model in Figure 3.2.5. The fifth version also split the column part and the bridge part into separate components, such that if the part were to be cast out of metal, the columns and bridge could be fabricated separately.

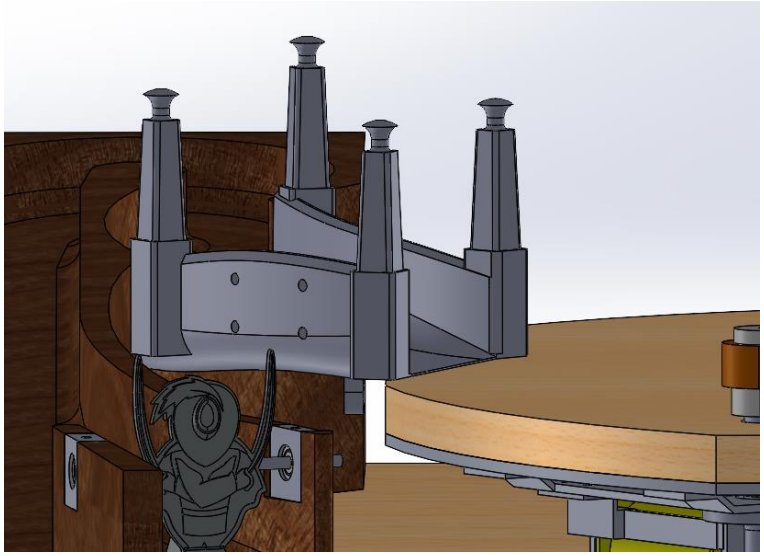

Fig. 3.2.7. Beta Bridge v6

The last iteration included minor form adjustments such that the Beta Bridge model could be mated with the updated playfield additions of the Upper Playfield Ramp (3.3) and the 1/8-inch piece of aluminum located underneath the upper playfield.

Future Work:

The Beta Bridge model is saved as a CAD file and can be modified. Currently, it has been successfully 3D-printed using the Bambu Labs 3D printer located in the MILL. However, concerning pinball gameplay, a 3D-printed part will not be able to withstand the multiple collisions it will experience with the pinball, and the consequential future direction of the Beta Bridge is that it is cast out of metal to increase its durability.

3.3 Upper Playfield Ramp

Introduction:

The upper playfield ramp connects the lower playfield to the upper playfield. The bridge is designed to let the ball roll up smoothly. The ramp will fit between the upper playfield and the hairpin ramp.

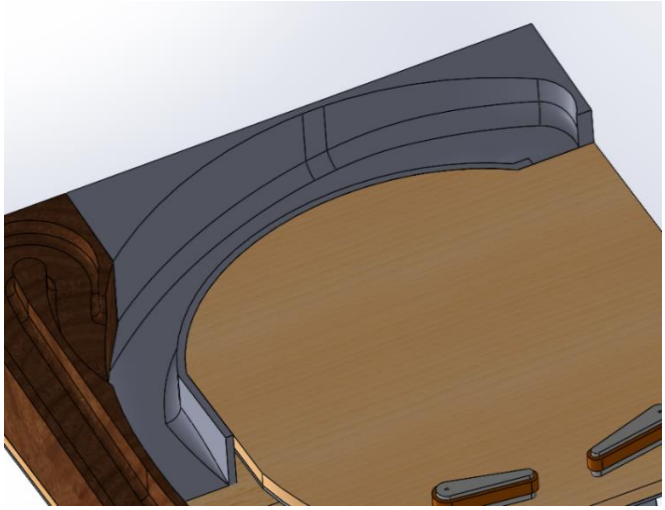

Fig. 3.3.1. Upper Playfield Ramp in Assembly

CAD Model:

The base of the ramp was made to fit between the upper playfield and the hairpin ramp. The surface of the ramp was made using several curves throughout the ball path. These curves had heights and other dimensions that can be edited to change the steepness and height of the ramp. To allow for the ball to travel smoothly around the curvature of the ramp, fillets were added along the ball path. The fillet's size is equal to the ball's radius, or 0.53125 inches.

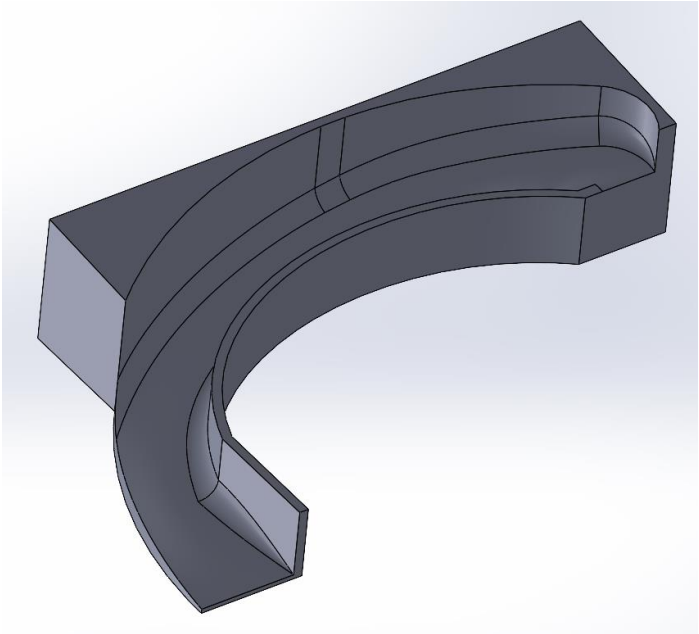

Fig. 3.3.2. Upper Playfield Ramp CAD Model

Stock Wood

The ramp is to be manufactured from marine-grade plywood. Since we had plenty of stock plywood, dimensions were taken for the ramp and several L-shaped cuts were made from the stock and then glued together.

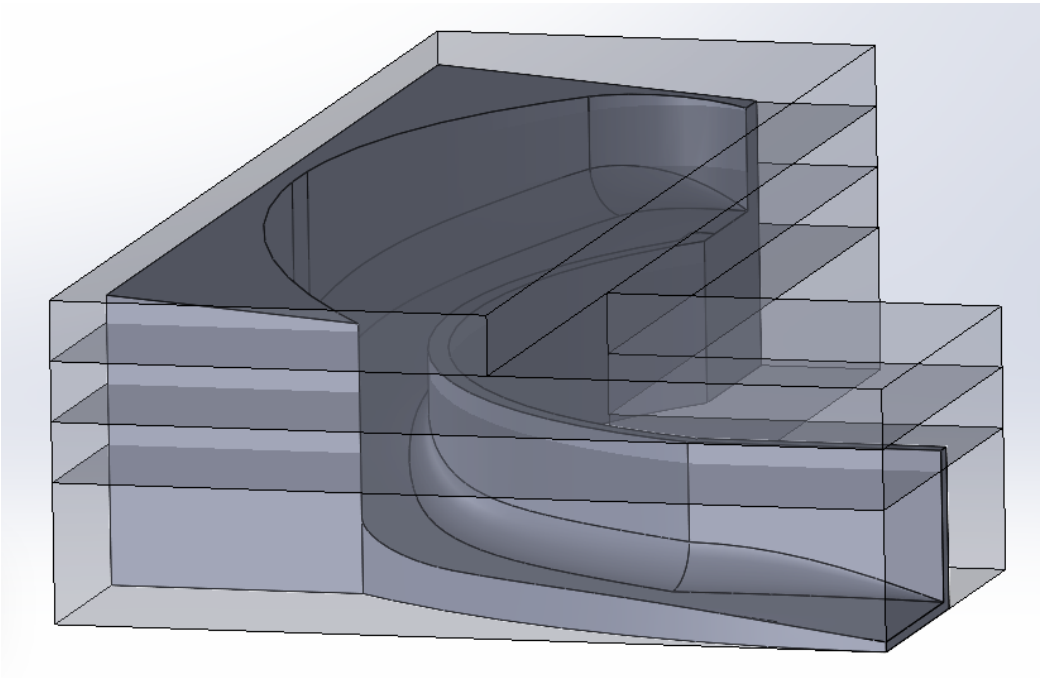

Fig. 3.3.3. Upper Playfield Plywood Stock CAD

Fig. 3.3.4. Upper Playfield Plywood Stock Glued

Future Work:

Future work includes using the CNC machine to cut out the ramp from the stock plywood and finding ways to incorporate ball detection sensors into the ramp.

3.4 Nextion Screen Mounts

Introduction:

The gameplay progression of the game is meant to be displayed above the drop targets, the heart of the game, using 3.5-inch Nextion screens. As the game progresses various images will be shown above the drop targets that are meant to be hit in a certain order. This in turn will add a level of difficulty to the game while also just being a cool and unique feature not found on current pinball machines manufactured today. These screens are very fragile and the ball bouncing around the playfield and off the drop targets would most certainly break them if hit. The Nextion screen mounts must be able to withstand the ball hitting the front screen protector,

without allowing the deflection of the screen protector to impact the screen, while also not allowing for a huge amount of glare due to this separation.

Design:

It was decided to try to keep the design as simplistic as possible while meeting all given constraints. The design phase went through two iterations, the first being a screen mount that had a screen protector on four stand offs that would give a 1 mm clearance between the protector and the screen which was determined to be not enough as the deflection caused by the ball could be greater than that. It was also recommended that the design did not show the components of the Nextion screen and only displayed the screen itself.

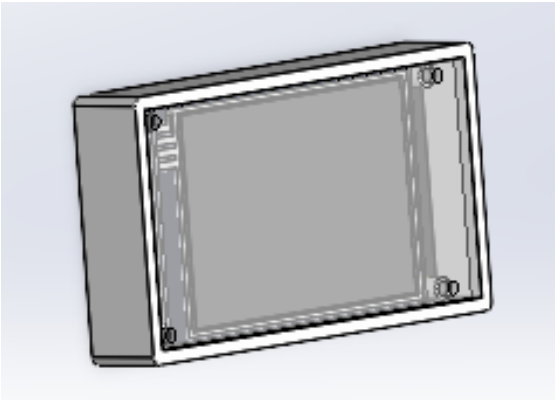

Fig. 3.4.1. Screen mount design v1

The second iteration of the screen mount included these recommended changes. The standoffs were made larger to account for deflection in the standoffs from repeated use, and the standoffs were made 1 mm taller to allow for 2 mm of clearance between the screen and screen protector. There was a lip added to the case to help with this deflection. A screen border was also added to hide the outer components of the Nextion screen.

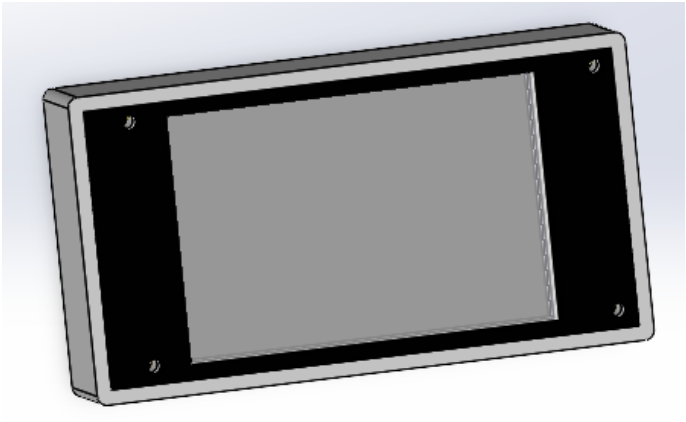

Fig. 3.4.2. Screen mount design v2

Future Work:

The mounting of the screen cases to the playfield will be done using columns to mimic the colonnades found at Lambeth field. The wires from the Nextion screens will run out of the back of the case and down the columns into the bottom of the playfield. A 1/8-inch piece of scratch resistant polycarbonate will be used for the screen protectors and the columns will be ideally vacuum cast with pewter. Each screen will mount over two drop targets that are next to each other. Additional tweaking to the location of the screens and the exact way of mounting them will be required to be able to fit all components on the playfield.

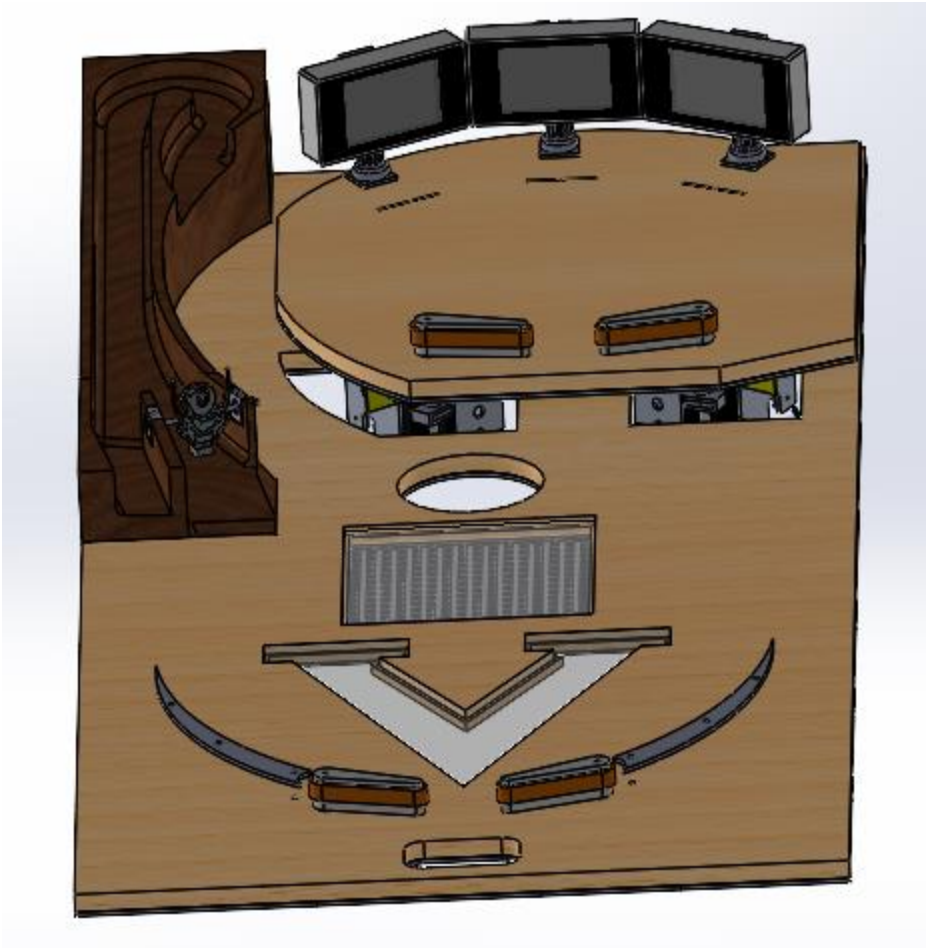

Fig. 3.4.3. Screen mount locations

3.5 Playfield Mounting Rails

Introduction:

The playfield must sit in the cabinet at an angle so that the ball naturally rolls down the playfield with gravity. Typically, this angle is between 6.5 to 7 degrees. To work on the machine and eventually perform maintenance on it, we also needed a way to access the bottom of the playfield. There are various ways other machines accomplish this. Some use rails; others prop up like the hood of a car. Most use a hinge of some sort.

Design:

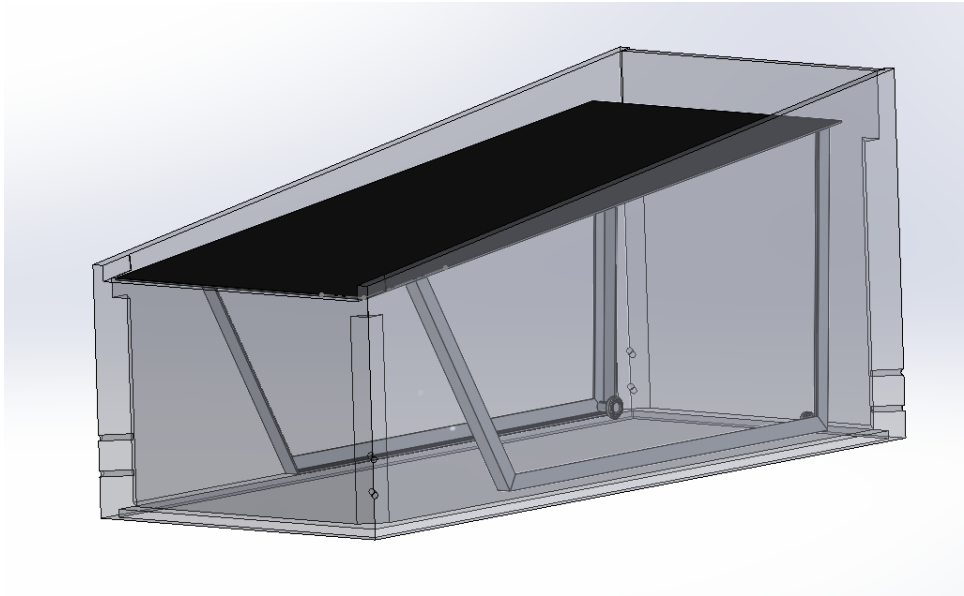

Fig. 3.5.1. Mounting rails on playfield inside of cabinet

We decided to keep the design simple yet effective. Figure 3.5.1 shows the SolidWorks model. Our plan involved cutting, bending, and welding two angle irons into rails upon which the playfield would sit. Bearings welded to the back corners would act as wheels, allowing the playfield to be wheeled around like a suitcase when it was removed from the machine. The rails' angle and orientation would permit the playfield to be rotated up and sit upright in the cabinet for work or maintenance. It could also be slid up and out of the cabinet altogether.

Future Work:

The mounting rails are not yet entirely designed because we do not know how far the tallest feature will extend above the playfield, so we do know how high the playfield must sit. Once this is determined, construction should be straightforward.

3.6 Logi Speaker Mount

Introduction:

The speaker mounts hold the pair of Logi speakers in place on the vertical headboard, as seen in Figure 3.6.1. The speakers will be mounted on the very sides of the headboard, one on each side of the Nextion screen.

Fig. 3.6.1. Headboard of the pinball machine

The speakers will be laid flat on their bases, giving them a slight upward angle. This angle is optimal for the pinball players to hear the sounds clearly and well.

Design:

The design of the mount consists of two pieces: a top half and a bottom half. Both pieces will work conjointly to secure the speakers in place. Before designing the mount, the speaker itself was dimensioned and precisely modeled into SolidWorks.

Fig. 3.6.2. Logi speaker and its SolidWorks model

Both the top and bottom halves would each include rod-like extrusions in the back to go through the headboard and be screwed in from the outside of the board, securing the speakers in their respective places. The bottom half's design was focused on first before moving on to the top half's design.

First Iteration

This version of the mounts only included the bottom mount. A rectangular base was extruded, and then the sides of the bottom half were modeled. However, the entire design failed to account for the trapezoidal shape of the speakers' bases. This design of the mount includes a space for an acrylic piece to slide between the front of the speaker and the inner front boundary of the mount, covering the Logi symbol.

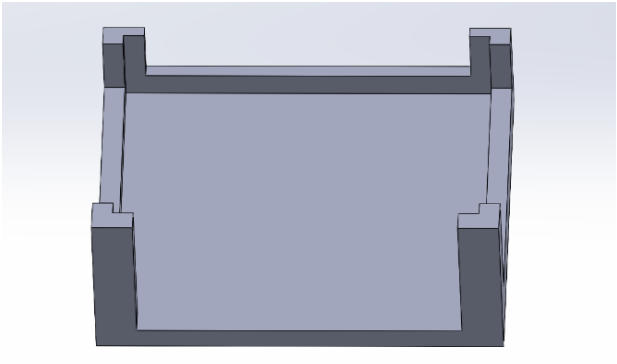
Fig. 3.6.3. Bottom half of the mount in Iteration 1

Second Iteration

This version of the bottom mount has the same fundamental design as version 1. However, the base is shaped in the same trapezoidal shape as the base of the speaker, allowing the speaker to lay snugly on the bottom half.

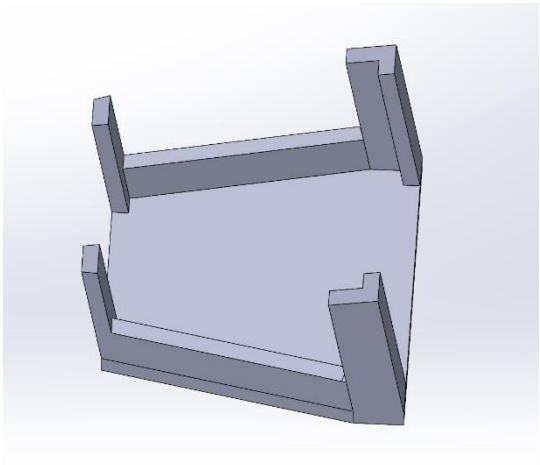

Fig. 3.6.4. Bottom half of the mount in Iteration 2

After modeling the bottom half, the top half was then modeled. The bottom of the top half is hollowed out to allow the top half to snugly fit onto the top of the speaker.

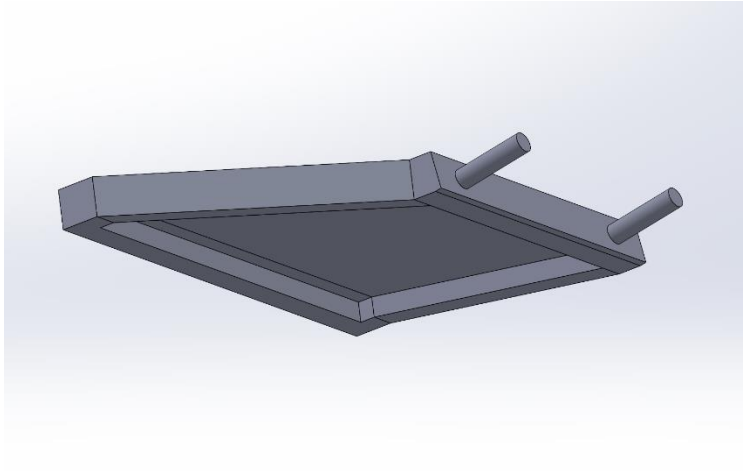

Fig. 3.6.5. Top half of the mount in Iteration 2

Together, the top half and the bottom half sandwich the speaker in between them and lock the speaker into place. Both halves would be screwed into the headboard of the cabinet. The

space between the front of the speaker and the inner front of the bottom half allows for an insertable acrylic piece to cover the Logi speaker on both speakers.

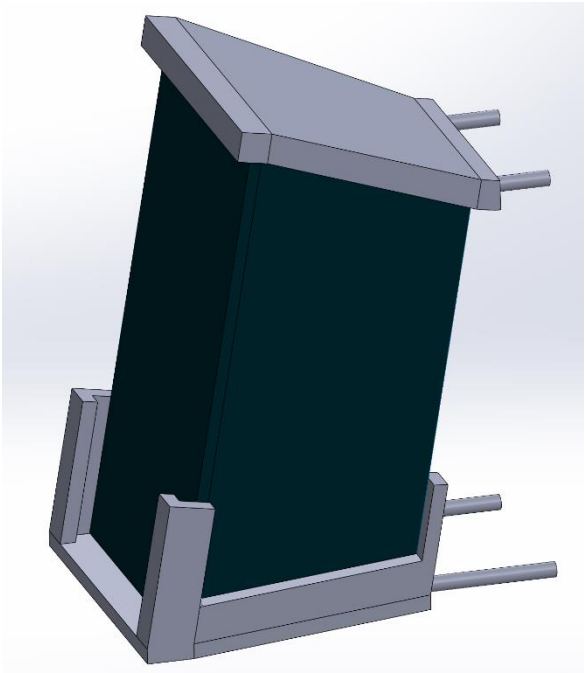

Fig. 3.6.6. Full assembly of the speaker and the mount

Future Work

The speaker mount needs to be 3D printed and tested to check for effectiveness and accuracy. The spacing also needs to be confirmed with the printed mount, in relation to the Nextion screen on the headboard.

Chapter 4: Gameplay, Electronics, and Software Development

4.1 Overall Gameplay

Although every pinball game is different, they all have the same objective: to score as many points as possible by knocking the ball around and hitting targets. Oftentimes, gameplay is set up to take the player on a journey. Hitting the right targets at certain moments or in a specific order may allow the player to access different modes and score points as they advance through the stages of the game.

The structure of our gameplay takes the player through the life of a typical UVA student and is adopted from the 2016 pinball group. Instead of having a high scoring game like other pinball machines (in the millions), the players' progress is measured in credit hours like a student taking classes. The game starts in first year mode and moves through the years until the player finishes fourth year mode. Within each mode, there are a number of achievements that the player can make such as picking a major, going out to bars, or pulling an all-nighter. After completing all four years, the player can continue to score points by going into either Alumni Mode or Faculty mode. Both paths have their own corresponding sub-modes and activities.

Table I
Undergrad modes and how they are activated

Undergrad Mode				
	1st Year Mode	2nd Year Mode	3rd Year Mode	4th Year Mode
Upper Playfield Droptarget (U)=	Orientation Week	*Pick Major	Career Fair	**Write Thesis (1)
Upper Playfield Droptarget (V) =	Activities Fair	Study in Clemons Libary	^Spring Break!	**4th Year 5K (2)
Upper Playfield Droptarget (A) =	^Rush Week	^Work Out at AFC	All Nighter Mode (lights out)	**^Hit Bars on Corner (3)
Hairpin Turn Sensor (E) =	Hike Humpback Rocks	Carter Mountain	^Ticket for Foxfield Races	^Ticket for Basketball Game
Rotunda Ball Trap	Lighting of Lawn	Trick or Treating	Streaking the Lawn	Walk the Lawn
Scott Stadium (Ball Trap)	*Attend Football Game	*Attend Concert	*Foxfield Races	*Basketball Game

Table II
Alumni modes (achieved after Undergrad mode) and how they are activated

Alumni Mode				
	Job Mode	Manager Mode?	Board of Visitors Mode	Rector Mode
Upper Playfield Droptarget (U)=	**Prepare Resume (1)	Promotion	Make Political Connections	Hire New Faculty
Upper Playfield Droptarget (V) =	**Interview (2)	Hire Good Employees	Donate Money to UVA	Build Alumni Connections
Upper Playfield Droptarget (A) =	**^Paycheck (3)	Get stock options	Send Kids to UVA	Create a New School
Hairpin Turn Sensor (E) =	Networking	Paid Vacation	Travel in UVA Leer Jet	Travel in UVA Leer Jet
Rotunda Ball Trap	Young Alumni Reunion	Join Alumni Club	Random Rotunda Bonus	For The Win!
Scott Stadium (Ball Trap)	*Attend Football Game	*Basketball Game	VIP Box Seats	(No time for games)?

Table III
Faculty modes (achieved after Undergrad mode) and how they are activated

Faculty Mode				
	Grad Student Mode	Faculty Mode	Dean Mode	President Mode
Upper Playfield Droptarget (U)=	**Write Papers (1)	Teach Courses	Built New Building	Work with Faculty Senate
Upper Playfield Droptarget (V) =	**Defend Master's (2)	Get Grant Money	Work with Dept Chairs	Work with Provosts
Upper Playfield Droptarget (A) =	**^Defend Doctorate (3)	Get Tenure	Confer degrees	Work with Deans
Hairpin Turn Sensor (E) =	Summer=Study	Summer=Publish Papers	Travel in UVA Leer Jet	Travel in UVA Leer Jet
Rotunda Ball Trap	Walk the Lawn Again	Join Colonnade Club	Random Rotunda Bonus	For The Win!
Scott Stadium (Ball Trap)	(No time for games)?	(No time for games)?	VIP Box Seats	(No time for games)?

** Possible mini quiz game on screen*
*** Must be completed in order (otherwise all targets reset or "4th year 5th" penalty mode)*
**** Not required to complete level*
^Hitting target opens something (Scott Stadium Diverter, Steam Tunnel Multiball)

Along with modes, there is space for features such as score multipliers which can be activated at any time throughout the game. Also, there are some easter eggs which can activate secret modes, such as a fourth-year 5th mode. Our philosophy is that if gameplay relies on timeless UVA inside jokes or traditions, the game will be fun and engaging for years to come.

****Fig. 4.1.1 Screenshot of CAD assembly (should include all features) TO BE ADDED

4.2 Custom Solenoids

There are many advantages for making custom solenoids for this project. Although solenoids can be very powerful, they have their downsides. They can get hot, and burn themselves out, which is a common occurrence in pinball machine maintenance. The wire coils within the black night game can cost up to about $30 to replace. Also, to get the forces required from these solenoids requires high voltages and results in large current spikes, both of which can

be dangerous. Custom solenoids save money and make sure the solenoids are just powerful enough to carry out their specific needs. Also manufacturing our own coils makes it easy to implement current and temperature sensors to monitor coil performance. A paper from Schimpf (2013), helps to understand the relationship between solenoid force, and how the coil is wound. The force produced by a solenoid can be modeled by the equation below:

$$F(x) = \frac{-V^2 \mu_r \mu_0}{8\pi\gamma^2 l^2} W_f \alpha e^{-\frac{\alpha x}{l}} \tag{1}$$

$$W_f = \left(\frac{r_0}{r_a}\right)^2 \tag{2}$$

$\mu_r = \frac{permeablity\ of\ core\ material}{permeability\ of\ free\ spce}$

$\mu_r = permeability\ of\ free\ space$

$r_0 = inside\ radius\ of\ coil$

$r_a = radius\ to\ center\ of\ coil$

$\gamma = \ resistivity\ of\ wire\ per\ unit\ length\ of\ wire$

$l = length\ of\ coil$

$\alpha = \ln(\mu_r)$

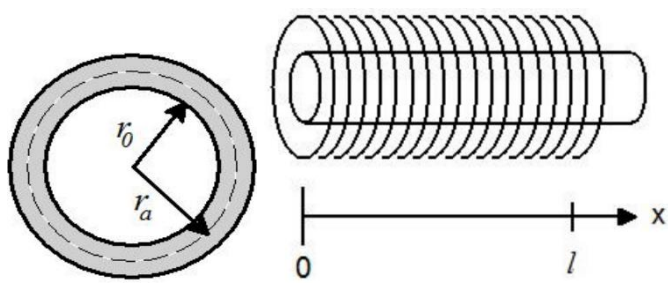

Fig. 4.2.1 Dimensions for r_a, r_o, and l

One interesting take away from this paper is that increasing the number of turns for a solenoid does not actually increase the force. If anything, it can decrease the force as it decreases the winding factor (Schimpf, 2013). When making custom solenoids, it is more important to focus on wire gauge, resistivity, and the size of the solenoid. If recreating a solenoid from an existing pinball machine, like the Black Knight, simply increasing the number of turns will not increase the force but decreasing them may.

Since solenoids often have hundreds of windings, a coil winder was constructed to aid in this project. The goal was to have a mechanism that could count the number of windings and

adjust its speed and direction, so the user has the control to make a neat, tight wound coil. For this subproject, it was decided just to make a mounting system that could be mounted into a vice; we did not want to spend too much time working on this subproject, so the whole enclosure system was not designed. The mounting for the brush motor was simply designed as a collar around the body of the motor that could be screwed in tightly.

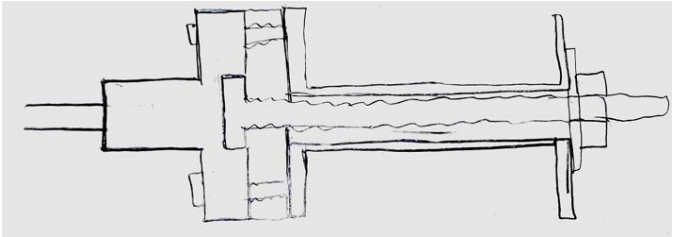

Fig. 4.2.2 Initial design for coil winder

The first iteration of this design included a long screw, with two flat ends. This way a spool of varying sizes could be screwed in. The second iteration included ends in the shape of a cone as opposed to flat ends. This allows for the spools of varying inner diameters to be held more securely.

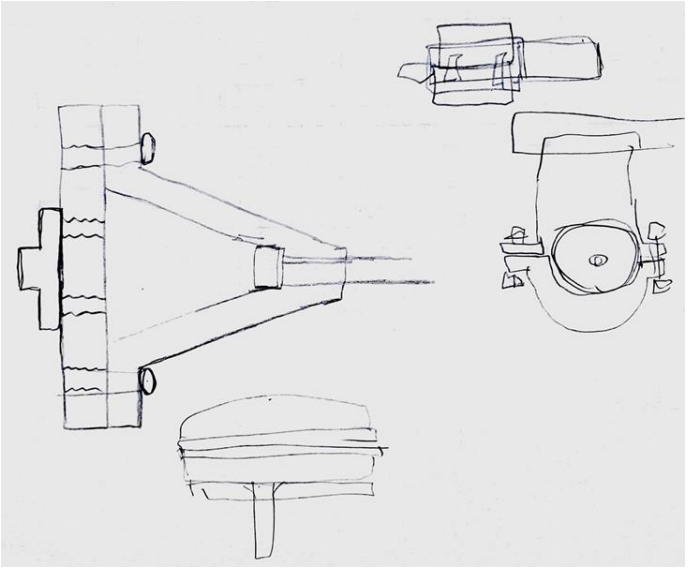

Fig. 4.2.3 Updated design for coil winder with cone mounts instead of flat mounts. Also includes initial sketches for motor collar

A DC brush motor was used for wrapping with a potentiometer to adjust speed, a switch to change direction, and an inductive proximity sensor to count the number of turns. The user guides the wire manually as the mechanism spins. A control panel for the user was laser cut, with rastered letters.

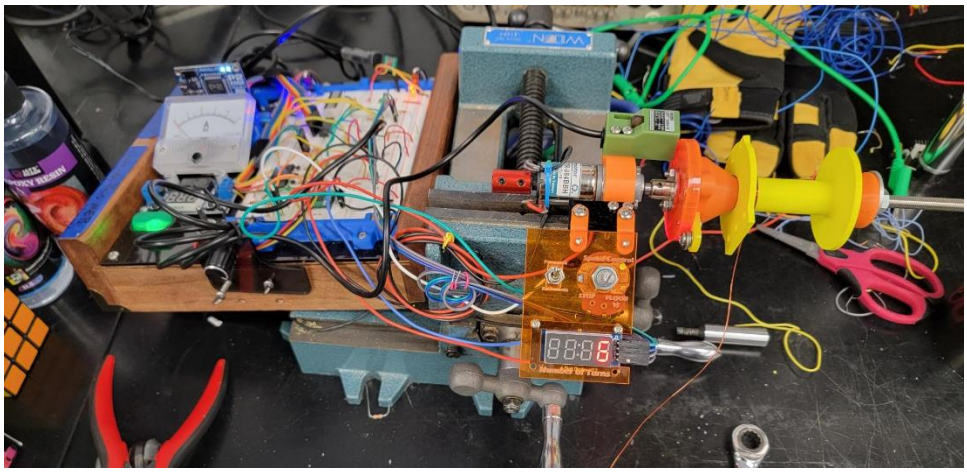

Fig. 4.2.4 Final set up for coil winder

The coil counter is run by a Propellor 2 chip, and its wiring can be found below.

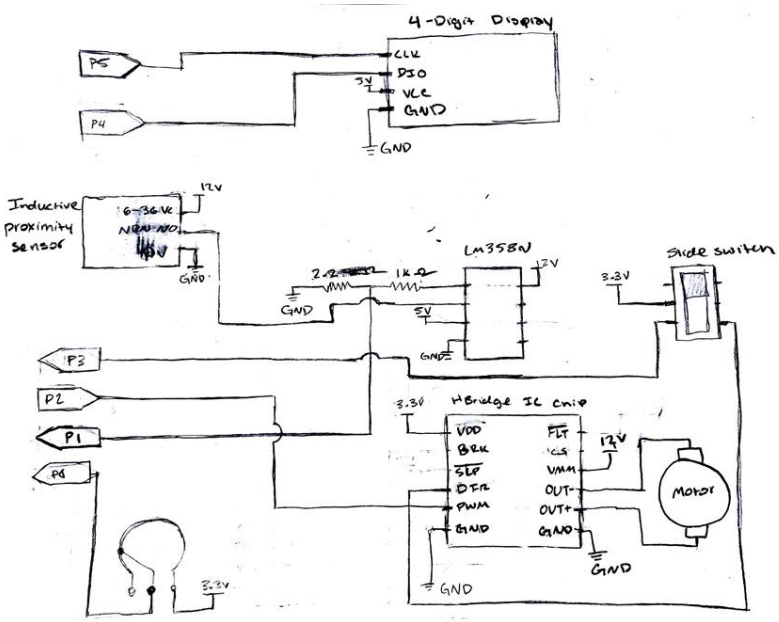

Fig. 4.2.5 Coil winder schematic

Future Work:

Since this project was only one semester long, there was not time to dwell on this project and perfect it as there were many more pressing things to work on. However, if one would need to wind many custom coils for a future project, there are a few things that could be optimized. Right now, the complete set up is on one of Professor Garners MEB boards, and the code is not uploaded to EEPROM, so every time the counter is turned on it needs to be reuploaded. If the coil counter is used regularly in the future, it should be set up on its own separate board, and the code should run automatically. Also, it may be helpful to implement foot petal, rather than a potentiometer knob, to adjust the winding speed.

4.3 Sensor Scanner System

Introduction:

A sensor scanning system was outlined to monitor of all the sensors in the pinball machine such as IR distance sensors and inductive proximity sensors keeping track of where the ball is, temperature sensors keeping track of whether or not the solenoids used in various mechanisms (including the flippers, slingshots, and pop bumpers) are overheating, current sensors measuring the electrical current flowing through the solenoids, and pushbuttons controlling the flippers. The scanning system will store and continuously update the sensor outputs to allow for the game's programming. The planned scanning system will use two 16-channel analog multiplexers to switch one of up the 32 inputs (including sensors) through a single common output. The recorded outputs of the two multiplexers will be combined in software to produce a single 32-bit data array that keeps track of the outputs. The idea behind using two multiplexers in parallel to read two sensor outputs at a time is to minimize the number

of pins being used up by our Propeller 2 chip, which is the heart of the coding aspect of the game. Instead of using 32 pins to read each sensor we will only need to use six pins, four input bit pins and two signal pins from the multiplexers.

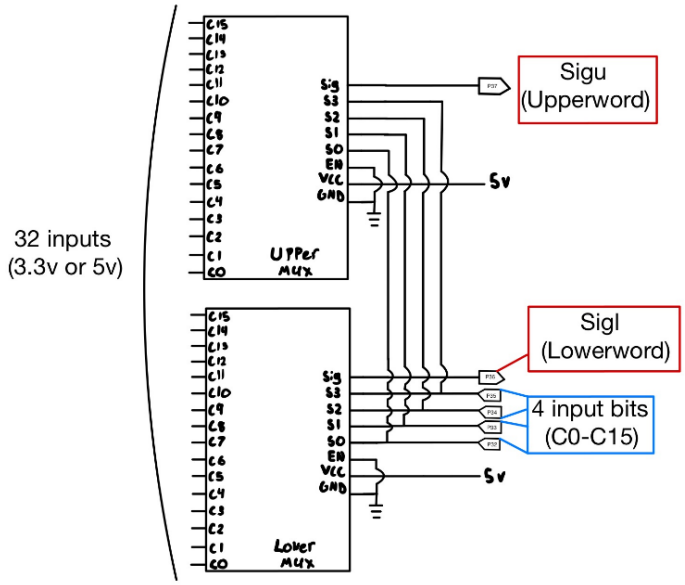

Fig. 4.3.1. Wiring diagram for two parallel multiplexers

```
Con
  _xinfreq = 19_200_000
  _clkfreq = 300_000_000

  s0 = 0
  s1 = 1
  s2 = 2
  s3 = 3
  sigl = 4
  sigu = 5

var


Pub Main() | upperword, lowerword, sensors, channel

  dira.[3..0]~~
  repeat
    upperword := 0
    lowerword := 0

    repeat channel from 15 to 0
      outa.[3..0]:=channel
      waitms(50)
      upperword := upperword + pinr(sigu) <<channel
      lowerword := lowerword + pinr(sigl) <<channel

    sensors := (upperword << 16) + lowerword
    debug(ubin(sensors))
    waitms(2000)
```

Fig. 4.3.2. Spin2 code to record the outputs of the multiplexers

Temperature and Current Sensor Scanner with ADC Chip:

Before deciding on using op amps wired as comparators to record the outputs of the temperature and current sensors monitoring the solenoids for both component and player safety, a circuit using an analog-to-digital converter (ADC) chip was designed and tested.

A TLC2543 ADC chip was the central component to this circuit. The TLC2543 chip is a 12-bit analog-to-digital converter chip that measures an analog voltage and can output a number between 0-4095 based on its measurement. Each of the 12 bits (inputs) can be connected to its own sensor and the voltage measurements for each bit can be used to understand the sensor outputs and record them in software.

LM34 temperature sensors and ACS712 current sensors were used. The LM34 sensor outputs a voltage proportional to the ambient temperature in Fahrenheit and the ACS712 outputs a voltage proportional to the electrical current flowing through it. A spin2 program was written for the Propeller2 chip to translate these voltage values and to store the temperature and current values of the sensors.

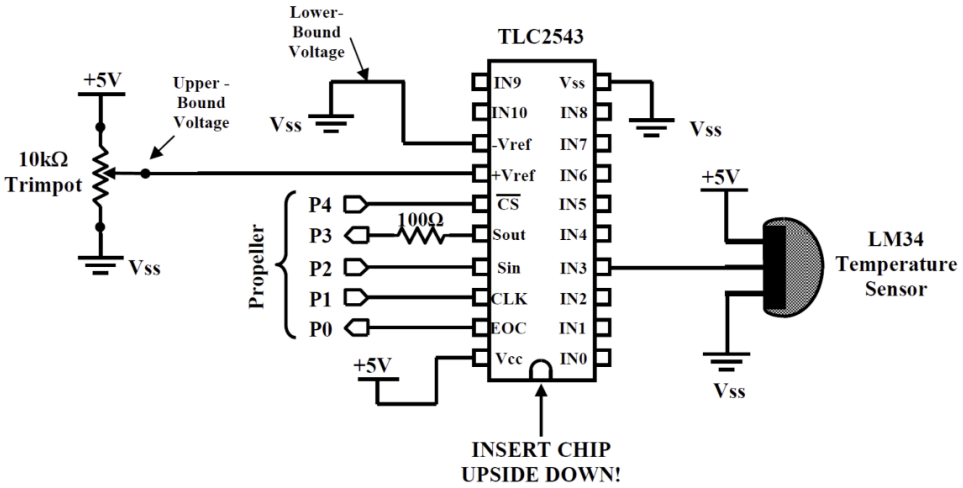

Fig. 4.3.3. Wiring diagram for circuit measuring LM34 sensor

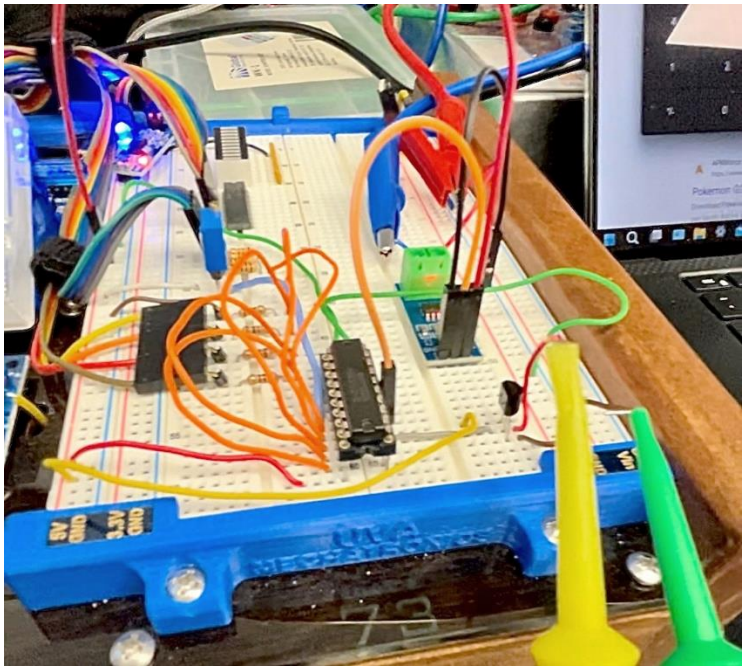

Fig. 4.3.4. Circuit with LM34 and ACS712 sensors wired on breadboard

```
con
  _xinfreq=19_200_000              'First line to work with black P2 chip:

  _clkfreq = 100_000_000           'The system clock is set at 100MHz

  eoc=0                            'P0 recieved the "end of conversion" signal from the ADC chip
  clk=1                            'P1 sends synchronous clock pulses to ADC chip
  Sout=2                           'P2 sends serial data out to ADC's Sin pin
  Sin=3                            'P3 recieves serial data sent from ADC's Sout pin
  cs=4                             'P4 controls the ADC's "chip select" pin
  SolenoidPin=7

pub DisplayADCValues() | ADCdata, i, Current
 outa.[cs]--
 debug(`term term1 pos 914 180 size 24 1 textsize 14 color yellow)
 debug(`term term2 pos 914 120 size 24 1 textsize 14 color red)
 debug(`term term3 pos 914 60 size 24 1 textsize 14 color yellow)
 debug(`term term4 pos 914 0 size 24 1 textsize 14 color cyan)
 repeat
   debug(`term1 clear)
   ADC(3)
   debug(`term1 "TempVoltage = " `(ADC(3)) " V")     'Display the voltage being read by the temperature sensor
   debug(`term2 clear)
   debug(`term2 "Temp = " `((ADC(3))*100) " °F")     'Display the temperature in Farenheit
   debug(`term3 clear)
   ADC(5)
   debug(`term3 "CurrentVoltage = " `(ADC(5)) " V") 'Display the voltage being read by the current sensor
   debug(`term4 clear)
   Current := ADC(5)
   Current := Current-2.5
   Current:= Current/0.185
   debug(`term4 "Current = " `Current " A")          'Display the current in Amps
   waitms(5)

pub ADC(NextChannel) : ADCbits | dataByte, i
  dira.[eoc]:=0    'Set direction of P0 as input     ***ALL DIRAs will change to DIRBs because we're using pins 32-36 for the ADC chip
  dira.[clk]:=1    'Set direction of P1 as output
  dira.[Sout]:=1   'Set direction of P2 as output
  dira.[Sin]:=0    'Set direction of P3 as input
  dira.[cs]:=1     'Set direction of P4 as output
  ADCbits:=0
  outa.[clk]-                          'Set the clock pin Low
  outa.[cs]-                           'Set the chip select pin Low
  dataByte:=NextChannel<<8+x0000<<4    'Set channel to do next conversion on & ADC mode (0000)
  repeat until pinr(eoc) == 1          'Check to see if eoc pin has indicated the end of the previous conversion
  repeat i from 11 to 0
    ADCbits:=(ADCbits<<1)+ina.[Sin]    'Shift previous data bits to left & add pin's current state
    outa.[Sout]:=dataByte>>i
    outa.[clk]-                       'Set clock pin to Low
    outa.[clk]--                      'Set clock pin to high (data is transferred across SPI)
    outa.[clk]-                       'Set clock pin to Low
  outa.[cs]--                         'Set chip select pin High
```

Fig. 4.3.5. Spin2 code to record the outputs of the sensors

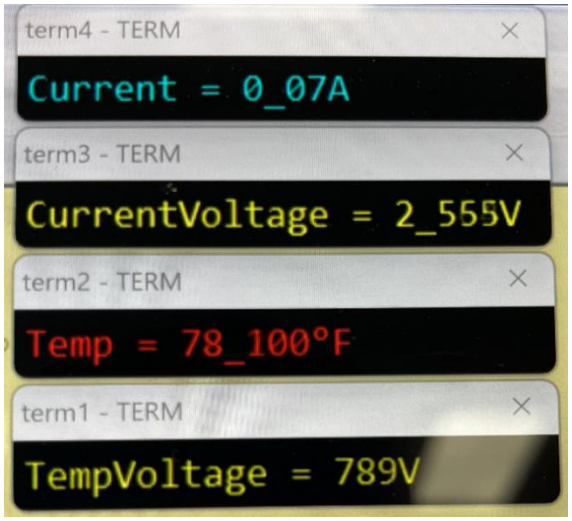

Fig. 4.3.6. On screen sensor outputs

This design was replaced to avoid using extra microcontroller input pins on the Propeller 2 chip, since comparator outputs for each of the sensors can be wired directly to the multiplexers.

Future Work:

Future work for the sensor scanner system includes testing the multiplexers with the sensors and writing the program to implement the system into the game. It was also decided that we should use four multiplexers in parallel rather than just two, to read 32 additional sensor outputs (64 total). Much of this cannot be done until the remaining components for the pinball machine are constructed and finalized.

4.4 Solenoid Driver Circuit

Design:

Our pinball machine was designed to use modern mechatronics. While pinball machines designed decades ago used mechanisms, like a button, to open/close the circuits that actuated solenoids, our machine will use digital logic voltages to activate the solenoid. We wanted to design our circuit to be activated by a digital signal from a sensor or from a microcontroller in

order to be able to control the firing of solenoids so that they are not able to overheat and so during certain modes of our game we can switch which button activates what solenoid.

Due to the fragility of microcontroller and sensor pins, our circuit design needed to incorporate a way to protect the pins from large solenoid current and voltages. We decided to use the MIC5013 MOSFET gate driver chip to protect our microcontroller pins when activating the solenoid. The MIC chip is designed to drive the gate of an N-channel power MOSFET and uses feedback from the shunt resistor, Rs, to prevent over-current conditions for the MOSFET. The MIC chip is powered by 7-32V and requires a 5V digital input to turn on the MOSFET signal. Again, this chip is a convenient way to isolate our signal circuit from the solenoid circuit.

The power MOSFET we decided to use was the IRF540 N-channel MOSFET. As stated earlier, the MIC5013 is designed to drive this type of MOSFET. Additionally, the IRF540 was soldered onto a breakout board for convenience reasons. The breakout board has a light on it that is activated when a signal is applied to the gate of the MOSFET which is convenient for debugging purposes. The IRF540 MOSFET was chosen because it has a 100V max, 20A continuous current max and a 110A pulse current max. The circuit shows 12V powering the solenoid, but this was just the small solenoid we used for testing. Our most powerful solenoids will operate below these maximum conditions. The final circuit is shown below.

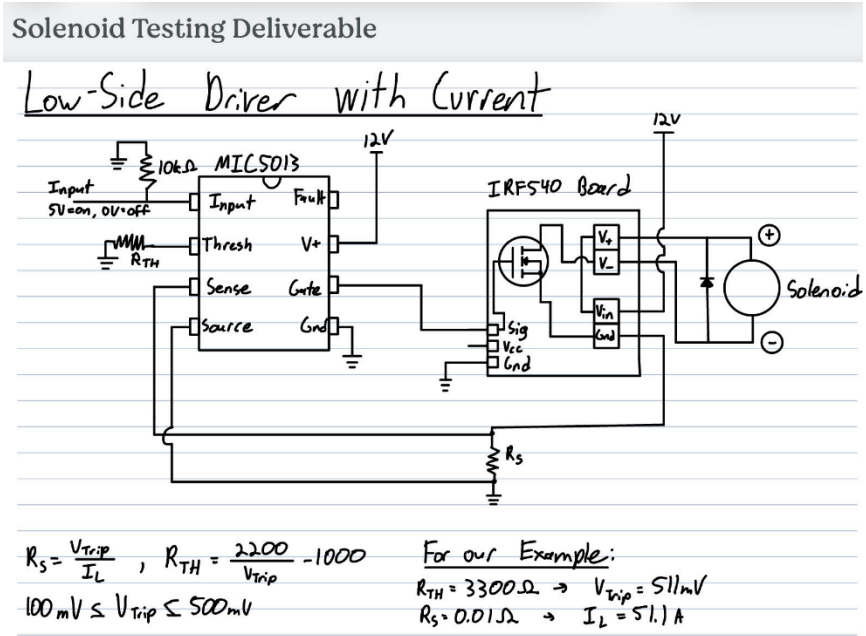

Fig. 4.4.1. Final solenoid driving circuit

4.5 Power Supply Modeling

Introduction:

The pinball machine must have its power supply self-contained within the cabinet. To achieve this result, we modeled the individual power supply components in SolidWorks to better understand their ideal layout.

Design:

The individual power supply components were as follows: 22,000 µF capacitors, a 5V 40A power supply, a large relay, a 100V 3A power supply, an 8-outlet power strip, and a USB type-a charging brick. The models were arranged onto a 12x12 sheet of 1/8” thick aluminum. All of the associated mounting brackets were designed. The final product is shown in Figure 4.5.1.

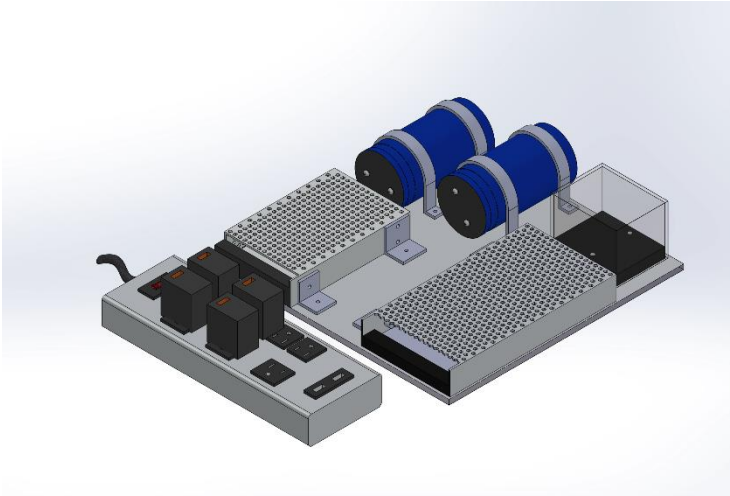

Fig. 4.5.1. Power supply mounting board final CAD model

Due to the dangerous nature of the high voltage power supplies, the remainder of the power supply mounting board's assembly was left for Professor Garner to complete. The finished power supply mounting board is shown in Figure 4.5.2.

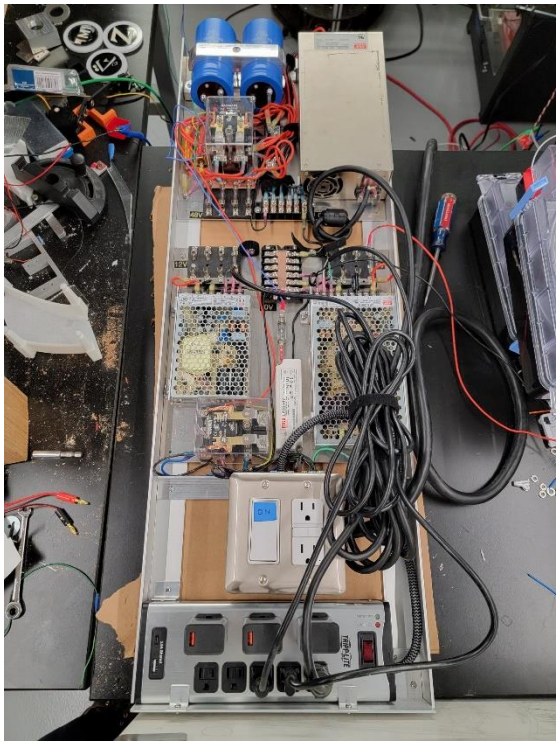

Fig. 4.5.2. Finished and mounted power supply for the pinball machine

The final design incorporates many additional power supply components as well as redesigned mounting brackets for the components. The entire system fits into the bottom of the pinball machine's cabinet and safely manages the large amount of electricity needed to power the machine.

Chapter 5: Conclusion

Final Thoughts

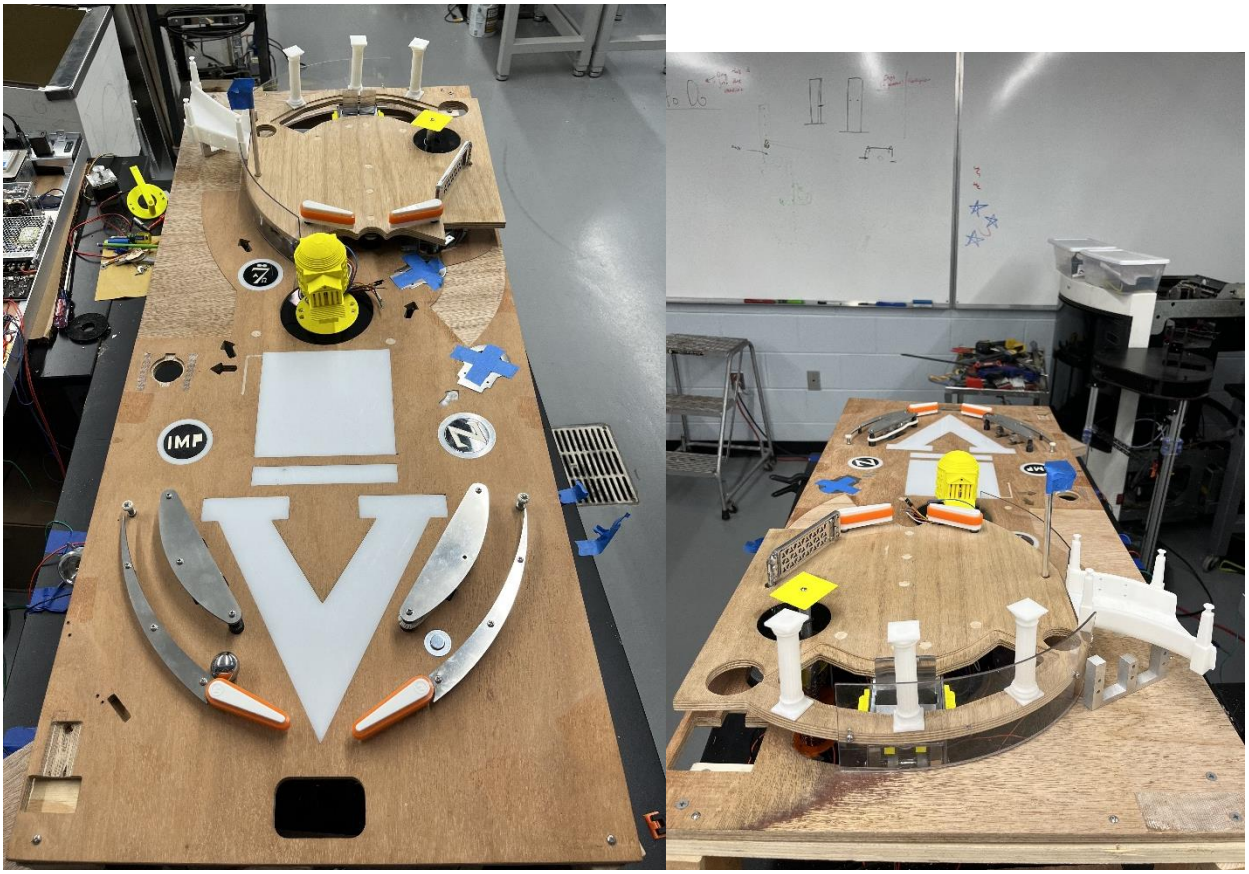

Fig. 5.1. Playfield prototype top views

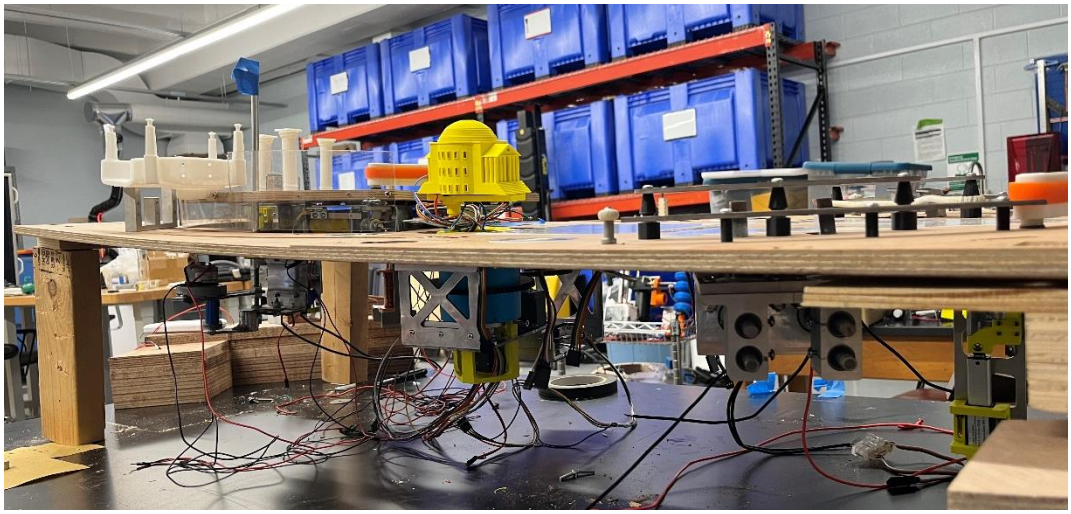

Fig. 5.2. Playfield prototype underside (left view)

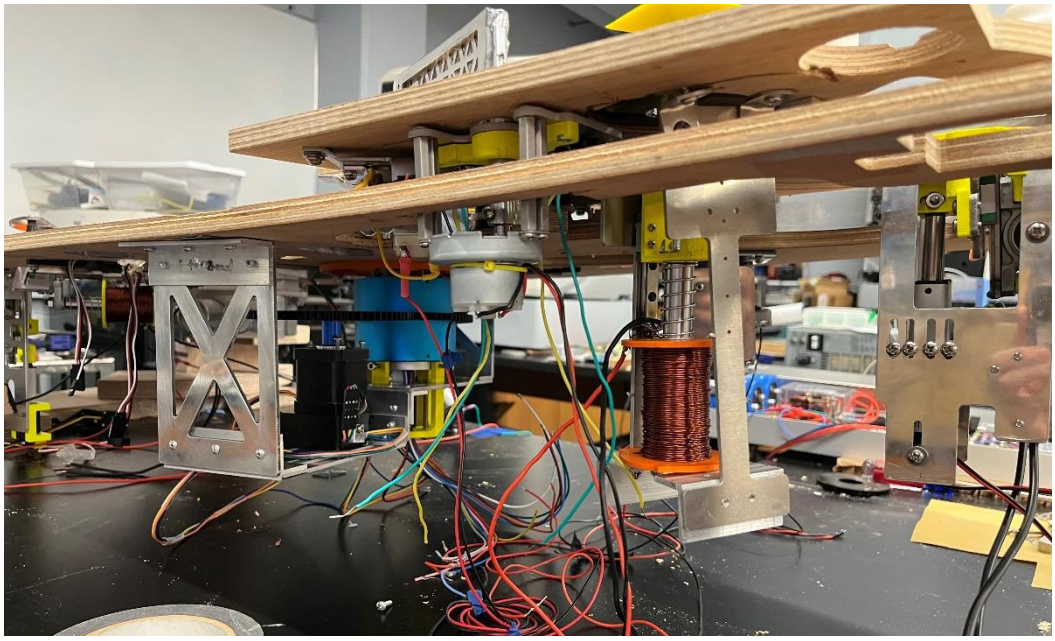

Fig. 5.3. Playfield prototype underside (right view)

Over the course of the semester, our group accomplished a great deal. We designed and redesigned many mechanisms until they operated smoothly, consistently, and dependably. We brought many of them into reality through prototyping and eventually finalizing them in sturdy, polished metal forms. With only about two months, we made significant progress on the upper playfield and more, but were unable to finalize an entire, working machine. We did not get to very much of the coding. Physically, we have mounted many of our devices onto a prototype playfield as seen in Figures 5.1 through 5.3. Therefore, this machine will not be installed in the 1515 study space yet.

Future Work

We believe in this project. Our hope is that a future Capstone group will discover the relevance and wonder of pinball and see how UVA could benefit from a UVA-themed Pinball machine of our own design. This report would serve as a starting point for this group so that they may push beyond our accomplishments and eventually see the completion of the project.

Fig. 5.4. Group photo of our capstone technical team

References

Kelly, M. (2017, March 14). *UVA honors inspiration for "Winged Aviator" statue, 100 years after his death*. UVA Today. https://news.virginia.edu/content/uva-honors-inspiration-winged-aviator-statue-100-years-after-his-death

Kriesel, D. (2018, May 17). *The growth of pinball: An evidence-based review.* This Week in Pinball. https://www.thisweekinpinball.com/the-growth-of-pinball-an-evidence-based-review-by-dennis-kriesel/

Park, S. (2020, October 16). Coronavirus leads to Spike in pinball popularity. *Yahoo! Finance.* https://finance.yahoo.com/news/coronavirus-leads-spike-pinball-popularity-204338481.html?guccounter=1&guce_referrer=aHR0cHM6Ly93d3cuY2JjLmNhL3JhZGlvL3RoZWN1cnJlbnQvcGluYmFsbC1wb3B1bGFyLXByb2ZpdC0xLjY2OTI4MjI&guce_referrer_sig=AQAAAGTnKNXXdX39wMV-2D_zHGg3jtMnKKoMrKvyv190noe1ZG57rIYge8_GMdnwEd5KjghZzIB6-NI6HHL1ZjMosx6iBF7ntj8zY_uN2V0ar69DpRmu2GVvTR-M4nPAn7fT4IAbqBZoafq_CIThcnqIEfWZ2dawAsqQDlxPczSLeTkT

Schimpf, P. H. (2013). A detailed explanation of solenoid force. *Int. J. on Recent Trends in Engineering and Technology*, 8(2), 7-14. doi:01.IJRTET.8.2.25